Automatica 50 (2014) 2435–2456

Contents lists available at ScienceDirect

Automatica

journal homepage: www.elsevier.com/locate/automatica

Survey paper

Stability analysis for stochastic hybrid systems: A survey☆

Andrew R. Teel[a,1], Anantharaman Subbaraman[a], Antonino Sferlazza[b]

[a] Department of Electrical and Computer Engineering, University of California, Santa Barbara, CA 93106-9560, United States

[b] Department of Energy, Information Engineering, and Mathematical Models, University of Palermo, Palermo, 90128, Italy

ARTICLE INFO

Article history:
Received 21 February 2014
Received in revised form
13 July 2014
Accepted 15 July 2014
Available online 27 August 2014

Keywords:
Stochastic hybrid systems
Stochastic switched systems
Stochastic differential equations
Switching diffusions
Markov chains
Stochastic stability
Lyapunov functions
Converse theorems
Robustness

ABSTRACT

This survey addresses stability analysis for stochastic hybrid systems (SHS), which are dynamical systems that combine continuous change and instantaneous change and that also include random effects. We re-emphasize the common features found in most of the models that have appeared in the literature, which include stochastic switched systems, Markov jump systems, impulsive stochastic systems, switching diffusions, stochastic impulsive systems driven by renewal processes, diffusions driven by Lévy processes, piecewise-deterministic Markov processes, general stochastic hybrid systems, and stochastic hybrid inclusions. Then we review many of the stability concepts that have been studied, including Lyapunov stability, Lagrange stability, asymptotic stability, and recurrence. Next, we detail Lyapunov-based sufficient conditions for these properties, and additional relaxations of Lyapunov conditions. Many other aspects of stability theory for SHS, like converse Lyapunov theorems and robustness theory, are not fully developed; hence, we also formulate some open problems to serve as a partial roadmap for the development of the underdeveloped pieces.

© 2014 Elsevier Ltd. All rights reserved.

1. Overview

Stochastic hybrid systems (SHS) are dynamical systems that combine continuous change and instantaneous change and that include random effects. Some of the earliest references that study systems with these features include Bellman (1954), Bergen (1960), Bertram and Sarachik (1959), Rosenbloom (1955), Samuels (1959) and Sworder (1969). Several important subclasses of SHS have been studied extensively in the literature for the last several decades. These subclasses include *stochastic switched systems* (Chatterjee & Liberzon, 2004, 2006b; Dimarogonas & Kyriakopoulos, 2004; Feng, Tian, & Zhao, 2011; Feng & Zhang, 2006; Filipovic, 2009), *impulsive stochastic systems* (Wu, Han, & Meng, 2004), *Markov jump systems* (Chatterjee & Liberzon, 2006a, 2007; Mariton, 1990; Zhu, Yin, & Song, 2009), *hybrid switching diffusions* (Deng, Luo, & Mao, 2012; Ghosh, Arapostathis, & Marcus, 1991, 1993; Hanson, 2007; Hespanha, 2005; Khasminskii, Zhu, & Yin, 2007; Mao, 1999; Mao, Yin, & Yuan, 2007; Mao & Yuan, 2006; Pang, Deng, & Mao, 2008; Yin & Zhu, 2010; Yuan & Lygeros, 2005a,b; Yuan & Mao, 2003), *impulsive switching diffusions* (Yang, Li, & Chen, 2009), *stochastic impulsive systems driven by renewal processes* (Antunes, Hespanha, & Silvestre, 2010, 2012, 2013a,b; Hespanha & Teel, 2006), *diffusions driven by Lévy processes* (Applebaum, 2009; Applebaum & Siakalli, 2009; Bass, 2004; Fujiwara & Kunita, 1985), *impulsive stochastic systems with Markovian switching* (Hu, Shi, & Huang, 2006; Wu & Sun, 2006), *piecewise-deterministic Markov processes* (Costa, 1990; Costa & Dufour, 2008; Davis, 1984, 1993; Dufour & Costa, 1999; Hordijk & van der Duyn Schouten, 1984; Jacobsen, 2006; Yushkevich, 1983, 1986), *stochastic hybrid automata* (Bujorianu, 2004; Hu, Lygeros, & Sastry, 2000), *general stochastic hybrid systems* (Bujorianu, 2012; Bujorianu & Lygeros, 2006; Liu & Mu, 2006, 2008, 2009; Wu, Cui, Shi, & Karimi, 2013), and *stochastic hybrid inclusions* (Teel, 2013). In the most general models, instantaneous change is triggered both randomly in time and also possibly by the state reaching a certain region of the state space; moreover, the continuous evolution may have a diffusive component and the state values after instantaneous change may be determined via a probability distribution.

Some major applications for which SHS models have been usedin the literature (see also Cassandras & Lygeros, 2010) include financial systems (Applebaum, 2009, §5.6, David et al.,

☆ Research supported in part by NSF grant ECCS-1232035 and AFOSR grant FA9550-12-1-0127. The material in this paper was not presented at any conference. This paper was recommended for publication in revised form by Editor John Baillieul.

E-mail addresses: teel@ece.ucsb.edu (A.R. Teel), anantharaman@umail.ucsb.edu (A. Subbaraman), antonino.sferlazza@unipa.it (A. Sferlazza).

[1] Tel.: +1 805 893 3616; fax: +1 805 893 3262.

http://dx.doi.org/10.1016/j.automatica.2014.08.006
0005-1098/© 2014 Elsevier Ltd. All rights reserved.

2009, Hamilton, 1989, Ishijima & Uchida, 2011, Nunno, Meyer-Brandis, Øksendal, & Proske, 2006, Schaller & Norden, 1997), air traffic management systems (Hu, Prandini, & Sastry, 2005; Pola, Bujorianu, Lygeros, & Benedetto, 2003; Prandini & Hu, 2008, 2009; Prandini, Hu, Lygeros, & Sastry, 2000; Watkins & Lygeros, 2003), communication networks and networked control systems (Antunes et al., 2013a; Bohacek, Hespanha, Lee, & Obraczka, 2003; Donkers, Heemels, Van De Wouw, & Hetel, 2011; Hespanha, 2004, 2005, 2007; Hespanha, Bohacek, Obraczka, & Lee, 2001; Tabbara & Nesic, 2008), biological systems (Batt et al., 2005; De Jong et al., 2003; Ghosh & Tomlin, 2001; Hu, Wu, & Sastry, 2004; Kærn, Elston, Blake, & Collins, 2005; Lygeros et al., 2008; Rao, Wolf, & Arkin, 2002; Singh & Hespanha, 2010; Wilkinson, 2012), and power systems (Dhople, Chen, DeVille, & Dominguez-Garcia, 2013; Malhamé, 1990; Malhamé & Chong, 1983; Malhamé & Chong, 1985; Ugrinovskii & Pota, 2005; Wang & Crow, 2011). For financial systems, appreciation and volatility rates in financial markets may be subject to random, abrupt switches based on perceptions of investors and other unmodeled aspects of the economy. Air traffic management systems must contend with aircraft mode switching together with some diffusive, stochastic influences on aircraft dynamics. Flows in communication networks may be affected by random dropouts or congestion, and communication protocols may contain different modes for different operating conditions. Some biological concentration dynamics combine deterministic continuous evolution with stochastic birth and death events and promoter switching. Power systems can involve randomly-varying loads, electronic noise, and mode switching.

As these application areas suggest, a solid grasp of stability theory for SHS is useful for analysis or design of a wide range of systems. Of special interest to the control community are feedback systems that employ logic variables and randomness, and that perform well in the presence of discrete components, mechanical impacts, and random phenomena. This fact motivates this paper, which is a survey of stability analysis for SHS. In Sections 2–3, we review the main subclasses of SHS that have appeared in the literature while re-emphasizing, like in Pola et al. (2003), the common features found in most of these models. Section 4 addresses a variety of stability properties that have been considered in the SHS literature and Sections 5–7 summarize the basic known results about these properties. Typically, these results are sufficient conditions for stability that are expressed in terms of Lyapunov function candidates and bounds on the system's "infinitesimal generator" applied to these functions. Such results are summarized in Section 5 and connected to the SHS literature in Section 6. Relaxations of Lyapunov conditions are considered in Section 7.

SHS constitute an important generalization of non-stochastic hybrid dynamical systems, for which significant breakthroughs in stability theory have been carved out over the last decade (Branicky, 1998; DeCarlo, Branicky, Pettersson, & Lennartson, 2000; Liberzon, 2003; Michel, Hou, & Liu, 2008), including converse Lyapunov theorems, which establish the existence of smooth Lyapunov functions for asymptotic stable compact sets, and a variety of robustness properties (Goebel, Sanfelice, & Teel, 2012). In contrast, these types of results for SHS are not yet fully developed. Hence, in addition to surveying existing stability results, we pose several open problems in an attempt to provide a partial roadmap for the development of additional pieces that are needed to complete the stability theory puzzle for SHS. This is the nature of Section 8.

To keep the survey focused, we do not delve into SHS with delays, stochastic functional differential equations, or singular SHS, though we note that special types of such systems have been studied in the literature and some sufficient conditions for stability exist (Benjelloun & Boukas, 1998; Boukas, 2006a; Cao, Lam, & Hu, 2003; Huang & Mao, 2011; Ma & Boukas, 2009; Mao, 2002; Mao, Matasov, & Piunovskiy, 2000; Mao & Shaikhet, 2000; Peng & Zhang, 2010; Wang, Qiao, & Burnham, 2002; Xia, Boukas, Shi, & Zhang, 2009; Yang, Xu, & Xiang, 2006; Yuan & Mao, 2004; Yue, Fang, & Won, 2003; Yue & Han, 2005; Yue & Won, 2001). We also do not spend time on linear (jump Markov) systems and associated linear matrix inequalities for stability, though such results are extensive in the literature (Aberkane, 2011; Basak, Bisi, & Ghosh, 1996; Bolzern, Colaneri, & De Nicolao, 2010; Boukas, 2006b; Boukas & Shi, 1998; de Souza, 2006; Dragan & Morozan, 2002; El Ghaoui & Ait Rami, 1996; Fang & Loparo, 2002; Feng, Loparo, Ji, & Chizeck, 1992; Fragoso & Baczynski, 2002a,b; Fragoso & Costa, 2005; Gerencsér & Prokaj, 2010; Karan, Shi, & Kaya, 2006; Loparo & Fang, 2004; Mariton, 1988, 1990; Wu, Ho, & Li, 2010; Xiong, Lam, Gao, & Ho, 2005; Zhang & Boukas, 2009). Space constraints also limit our discussion of the SHS literature's exploration of almost sure exponential stability (Deng et al., 2012; Mao, 1999; Mao et al., 2007; Pang et al., 2008; Xiang, Wang, & Chen, 2011; Yuan & Lygeros, 2005a), asymptotic stability in distribution (Yuan & Mao, 2003), and input-to-state stability (Wu et al., 2013; Zhao, Feng, & Kang, 2012).

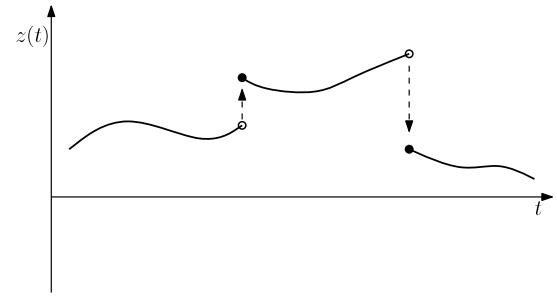

Fig. 1. A Càdlàg signal.

2. A unified framework

2.1. Solution candidates

Stochastic hybrid systems produce solutions defined on a probability space $(\Omega, \mathcal{F}, \mathbb{P})$ where Ω is the sample space, $\mathcal{F}$ is the event space, and $\mathbb{P}$ is the probability function defined on the event space. The symbol $\mathbb{E}$ is used for the associated expected values. We use $x \in \mathbb{R}^n$ to denote the state of a SHS. It may contain continuous-valued variables and discrete-valued variables, including logic variables, counters, and timers. For most of the SHS that we consider, solutions are measurable mappings $\mathbf{x} : \Omega \to \mathbb{D}([0,\infty), \mathbb{R}^n)$, where $\mathbb{D}([0,\infty), \mathbb{R}^n)$ denotes the space of Càdlàg functions from $[0,\infty)$ to $\mathbb{R}^n$. A function $\phi : [0,\infty) \to \mathbb{R}^n$ is Càdlàg if it is right continuous with left limits, that is, $\lim_{s\downarrow t} \phi(s) = \phi(t)$ for all $t \in [0,\infty)$ and $\phi(t^-) := \lim_{s\uparrow t} \phi(s)$ exists for all $t \in (0,\infty)$. See Fig. 1. A solution evaluated at random time $\mathbf{T} \geq 0$ is denoted $\mathbf{x}(\mathbf{T})$. Both $\mathbf{x}$ and $\mathbf{x}(\mathbf{T})$ are functions of $\omega \in \Omega$, though we rarely make the ω dependence explicit; the values of $\mathbf{x}$ belong to $\mathbb{D}([0,\infty), \mathbb{R}^n)$ while the values of $\mathbf{x}(\mathbf{T})$ belonging to $\mathbb{R}^n$. For a Borel set $C \subset \mathbb{R}^n$, we use $\mathfrak{B}(C)$ to denote the Borel σ-algebra on C; $\mathfrak{B}(C) = \cup_{A\in\mathfrak{B}(\mathbb{R}^n)} A \cap C$.

2.2. A common structure found in most models

Hybrid systems involve the combination of continuous change, called *flows*, and instantaneous change, called *jumps*. SHS allow the flows and the jumps to have random characteristics and also allow the timing of jumps to be random. SHS that have appeared in the literature include the following classes:

(1) switched and impulsive stochastic differential equations,
(2) systems with spontaneous jumps including:
  (a) Markov jump systems,
  (b) hybrid switching diffusions,

Table 1
Summary of salient features of the models discussed in Section 3.

Subclass of SHS	Flows		Spontaneous jumps		Forced jumps		Generators	
	Flow set (C)	Flow map (f, h)	Rate (λ)	Transitions (R_C)	Jump set (D)	Transitions (R_D)	$\mathcal{L}V$	ΔV
Markov jump systems	$\mathbb{R}^n \times Q$	ODE	(10)	Stochastic, partial state	n/a	n/a	(12)	n/a
Switching diffusion systems	$\mathbb{R}^n \times Q$	SDE	(10)	Stochastic, partial state	n/a	n/a	(12)	n/a
Impulsive systems driven by renewal processes or Lévy diffusions	$\mathbb{R}^n$ logic variables embedded	SDE	Generic	Stochastic, full state	n/a	n/a	(13) or (14)	n/a
Stochastic switched and impulsive systems	$\mathbb{R}^n \times Q \times \mathcal{T}_c$ $\mathcal{T}_c$ in (4a) Section 3.1	SDE	n/a	n/a	$\mathbb{R}^n \times Q \times \mathcal{T}_d$ $\mathcal{T}_d$ in (4b) Section 3.1	Deterministic, partial state	(7)	(8)
Impulsive SDEs with Markovian switching	$\mathbb{R}^n \times Q \times \mathcal{T}_c$ $\mathcal{T}_c$ in (4a) Section 3.1	SDE	(10)	Stochastic, partial state	$\mathbb{R}^n \times Q \times \mathcal{T}_d$ $\mathcal{T}_d$ in (4b) Section 3.1	Deterministic, partial state	(15)	(8)
Piecewise-deterministic Markov processes	$\cup_{q\in Q}\left(C_q \times \{q\}\right)$ C_q in ($\flat$) Section 3.3	ODE	Generic	Stochastic, full state	$\cup_{q\in Q}\left(D_q \times \{q\}\right)$ D_q in ($\sharp$) Section 3.3	Stochastic, full state	(2a)$h \equiv 0$	(2b)
General stochastic hybrid systems	$\cup_{q\in Q}\left(X_q \times \{q\}\right)$ X_q open	SDE	Generic	Stochastic, full state	$\cup_{q\in Q}\left(\partial X_q \times \{q\}\right)$	Stochastic, full state	(2a)	(2b)
Stochastic hybrid inclusions	Closed	ODI	Generic but implicit	Stochastic, set-valued, full state	Closed	Stochastic, set-valued, full state	Not discussed	

(c) stochastic impulsive systems driven by renewal processes,
(d) stochastic differential equations driven by Lévy processes,
(e) impulsive stochastic differential equations with Markovian switching,

(3) piecewise-deterministic Markov processes,
(4) general stochastic hybrid systems,
(5) stochastic hybrid inclusions.

The following salient features are elaborated upon in Section 3 and summarized in the associated Table 1. Classes 1, 2b–2e, and 4 involve stochastic differential equations while classes 2a and 3 involve ordinary differential equations and class 5 allows differential inclusions. Classes 2, 3–4 and, indirectly, 5 allow for spontaneous jumps. Classes 1, 2e, 3–5 allow for state jumps that are forced, either by pre-determined jump times, as in classes 1, 2e, or, more generally, by the value of the state, as in classes 3–4; classes 2a–2d permit jumps only randomly in time. Classes 2a–2b usually involve jumps only of a discrete-valued state.

When looking for commonality in the models used for classes 1–4, the following ingredients emerge:

(1) a state $x \in \mathbb{R}^n$ possibly containing both continuous-valued variables and discrete-valued variables, including timers (for example, time itself), logic variables, and counters;
(2) (a) a jump set $D \subset \mathbb{R}^n$,
(b) a Borel measurable flow set $C \subset \mathbb{R}^n \backslash D$,
(c) a locally Lipschitz drift term $f : \mathbb{R}^n \to \mathbb{R}^n$, and
(d) a locally Lipschitz diffusion term $h : \mathbb{R}^n \to \mathbb{R}^{n\times m}$
such that, with w representing an m-dimensional Wiener process and $\zeta \in C$, there is a unique maximal solution to the constrained initial value problem

$$x \in C, \quad dx = f(x)dt + h(x)dw, \qquad x(0) = \zeta, \tag{1}$$

and almost every maximal sample path $\phi_{\zeta,\omega}$ has a time domain, denoted $\mathrm{dom}(\phi_{\zeta,\omega})$, with positive length $t^*_{\zeta,\omega}$; moreover, when this length is finite, $\lim_{t\uparrow t^*_{\zeta,\omega}} \phi_{\zeta,\omega}(t) \in D$;
(3) a jump-rate function $\lambda : C \to \mathbb{R}_{\geq 0}$ that determines the probability of jumps at random times during flows; it should be measurable and such that $t \mapsto \lambda(\phi_{\zeta,\omega}(t))$ is almost surely locally integrable on $\mathrm{dom}(\phi_{\zeta,\omega})$;
(4) transition functions $R_C : C \times \mathfrak{B}(C) \to [0, 1]$ and $R_D : D \times \mathfrak{B}(C) \to [0, 1]$; for each $x \in C$, $R_C(x, \cdot)$ is a probability measure that describes the values in C to which the state jumps at spontaneous transitions that occur when the state is at x, while for each $x \in D$, $R_D(x, \cdot)$ is a probability measure that describes the values in C to which the state jumps at forced transitions that occur when the state approaches x. We define $R : (C \cup D) \times \mathfrak{B}(C) \to [0, 1]$ by $R(x, \cdot) := R_C(x, \cdot)$ for $x \in C$ and $R(x, \cdot) := R_D(x, \cdot)$ for $x \in D$.

We denote the corresponding SHS through its data as $\mathcal{H} := (C, (f, h), (\lambda, R_C), D, R_D)$. Given this data and a closed set $S \subset \mathbb{R}^n$, we define $\mathcal{D}_{(\mathcal{H},S)}$ to be the set of continuous functions $V : \mathcal{O} \to \mathbb{R}$, where the set $\mathcal{O} \supset C \cup D$ is open and the following definitions are well-posed on the indicated sets:

$$\begin{aligned}\mathcal{L}V(x) \;:=\; & \langle \nabla V(x), f(x)\rangle + \frac{1}{2}\mathrm{tr}\left(h(x)h(x)^T\nabla^2 V(x)\right) \\ & + \lambda(x)\left(\int_C V(y)R_C(x, dy) - V(x)\right) \quad \forall x \in C \cap S, \end{aligned} \tag{2a}$$

$$\Delta V(x) := \int_C V(y)R_D(x, dy) - V(x) \quad \forall x \in D \cap S, \tag{2b}$$

where "tr(M)" denotes the trace of the square matrix M, that is, $\mathrm{tr}(M) = \sum_{i=1}^n m_{ii}$. The operators $\mathcal{L}$ and Δ in (2) play a fundamental role in the analysis of the behavior of solutions to $\mathcal{H}$. Solutions to $\mathcal{H}$ with jumps forced at points in D and jumps occurring randomly during flows in C are produced as follows:

<u>Solution generation algorithm</u>

Given an initial condition $\zeta_0 \in C$,

(0) set $i = 0$ and $\mathbf{S}_0 \equiv 0$;
(1) a random variable $\mathbf{S}_{i+1}$ taking values in $[0, \infty]$ is generated with distribution such that the probability of being greater than t is zero when $t \geq t^*_{\zeta_i,\omega}$ and the probability of being greater than t equals $\exp\left(-\int_0^t \lambda(\phi_{\zeta_i,\omega}(s))ds\right)$ otherwise;
(2) If $\mathbf{S}_{i+1} = \infty$, then $\mathbf{x}\left(t + \sum_{j=0}^i \mathbf{S}_j\right) = \phi_{\zeta_i,\omega}(t)\ \forall t \geq 0$.
(3) If $\mathbf{S}_{i+1} < \infty$, then $\mathbf{x}\left(t + \sum_{j=0}^i \mathbf{S}_j\right) = \phi_{\zeta_i,\omega}(t)$ for $t < \mathbf{S}_{i+1}$ and $\mathbf{x}\left(\sum_{j=0}^{i+1} \mathbf{S}_j\right) = \boldsymbol{\zeta}_{i+1}$, where $\boldsymbol{\zeta}_{i+1}$ is a C-valued random variable having distribution $R(\lim_{s\to\mathbf{S}_{i+1}} \phi_{\zeta_i,\omega}(s), \cdot)$.
(4) let $i = i + 1$ and return to step 1.

Note that this algorithm is not defined for initial conditions in D; moreover, while a sample path may approach the set D in finite time, it never actually takes a value in D.

We assume that the data of $\mathcal{H}$ is such that the above algorithm is well-posed and yields solutions with the properties found in the following assumption.

Assumption 2.1. The data $(C, (f, h), (\lambda, R_C), D, R_D)$ is such that, for each initial condition $\zeta \in C$, the solution generation algorithm produces sample paths belonging to $\mathbb{D}([0, \infty), \mathbb{R}^n)$ almost surely and admitting a measurable extension $\mathbf{x} : \Omega \to \mathbb{D}([0, \infty), \mathbb{R}^n)$. Moreover, there is a filtration $\{\mathcal{F}_t\}_{t\geq 0}$ of $\mathcal{F}$, independent of ζ, with respect to which:

1. $\mathbf{x}$ has the strong Markov property (for more details, see Fristedt & Gray, 1997, Section 31.2 or Davis, 1993, Section 14.1);
2. the hitting time $\mathbf{S}_{\mathcal{O}} := \inf\{r \geq 0 : \mathbf{x}(r) \in \mathcal{O}\}$, for each open set $\mathcal{O} \subset \mathbb{R}^n$, is a stopping time, i.e., $\{\omega \in \Omega : \mathbf{S}_{\mathcal{O}}(\omega) \leq t\} \in \mathcal{F}_t$ for all $t \geq 0$;
3. for each closed $S \subset \mathbb{R}^n$ and $V \in \mathcal{D}_{(\mathcal{H},S)}$,

$$\Delta V(x) \leq 0 \quad \forall x \in D \cap S \Longrightarrow \tag{3}$$
$$\mathbb{E}\left[V(\mathbf{x}(t \wedge \mathbf{S}_{S^c}))\right] \leq V(\zeta) + \mathbb{E}\left[\int_0^{t\wedge \mathbf{S}_{S^c}} \mathcal{L}(V(\mathbf{x}(s)))ds\right] \quad \forall t \geq 0$$

where $S^c := \mathbb{R}^n \backslash S$ and $a \wedge b := \min\{a, b\}$. ■

The condition (3) is crucial for many of the results discussed later in this survey. In the case where D is the empty set and the inequality involving expected values is replaced by an equality, it corresponds to Dynkin's formula; see Fristedt and Gray (1997, Problem 19, p. 631). When D is nonempty, the first condition in (3) guarantees that the expected value of V does not increase at jumps from points in $D \cap S$, and condition (3) asks that this property guarantees a Dynkin inequality up to the hitting time of the complement of S.

Assumption 2.1 can be verified a priori for the SHS classes 1–4 listed above or, otherwise, is used implicitly in stability studies for these classes. For example, for hybrid switching diffusions under certain continuity and growth conditions found in Yin and Zhu (2010, Theorem 2.1 and Theorem 2.18), the Càdlàg property is established in Yin and Zhu (2010, Proposition 2.4), the strong Markov property is established in Yin and Zhu (2010, Corollary 2.19), and the applicability of the inequality (3) is established in Yin and Zhu (2010, §2.2) (the set D is empty for this class of systems) under appropriate boundedness assumptions. For piecewise-deterministic Markov processes under the conditions found in Davis (1993, Assumption 24.8), the Càdlàg property is established in Davis (1993, Theorem 27.8), the strong Markov property is established in Davis (1993, Theorem 25.5), and the applicability of the inequality (3) is established implicitly, at least for the case where $\Delta V(x) = 0$ for all $x \in D$, through Davis (1993, Theorem 26.14). For general stochastic hybrid systems under the conditions in Bujorianu and Lygeros (2006, Assumptions 1–3), the Càdlàg property is established in Bujorianu and Lygeros (2006, Corollary 1), the strong Markov property is established in Bujorianu and Lygeros (2006, Proposition 5) and the applicability of the inequality (3) is established implicitly, at least for the case where $\Delta V(x) = 0$ for all $x \in D$, through Bujorianu and Lygeros (2006, Theorem 2). See also Bujorianu (2012, Chapter 4). Beyond the Càdlàg property and the measurability, the typical steps involve imposing conditions to guarantee that the expected number of jumps in every bounded interval is finite, identifying an appropriate filtration $\{\mathcal{F}_t\}_{t\geq 0}$, usually one that is a right-continuous filtration Fristedt and Gray (1997, p. 384), establishing the strong Markov property with respect to this filtration, establishing that $\mathcal{L}$ corresponds to the infinitesimal generator for the dynamics in between forced jumps up to the stopping time $\mathbf{S}_{S^c}$, and invoking Dynkin's formula iteratively.

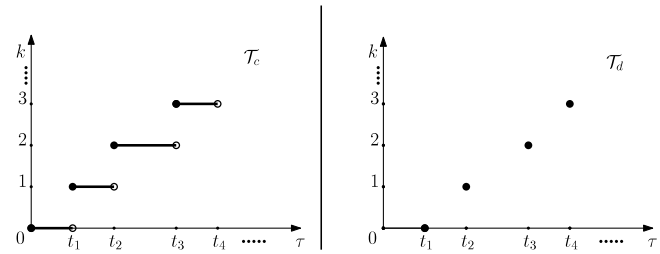

Fig. 2. The sets $\mathcal{T}_c$ and $\mathcal{T}_d$ of (4).

3. Special classes of SHS

3.1. Stochastic switched and impulsive systems

Perhaps the simplest class of systems that we consider in this survey are stochastic switched systems. In these systems, the continuous-time, stochastic evolution rule for the system's state switches among a countable family of possibly time-varying stochastic differential equations $dz = b_q(z, t)dt + \sigma_q(z, t)dw$, but the switching rules for q are not stochastic. These systems are studied in Chatterjee and Liberzon (2004), Chatterjee and Liberzon (2006b), Dimarogonas and Kyriakopoulos (2004), Feng and Zhang (2006), Feng et al. (2011), and Filipovic (2009).

Let $s \in \mathbb{D}([0, \infty), Q)$ denote the switching signal, where Q denotes the countable set in which it takes its values, and let $\mathcal{T} \subset \mathbb{R}_{>0} \cup \{\infty\}$ denote this signal's set of switching times, which either has an infinite number of finite elements or a finite number of elements with the last one being ∞. It is possible to consider these systems simply as time-varying stochastic differential equations by replacing q by the explicit time-switching function. However, to make connections to other related systems and to facilitate a simple extension to stochastic impulsive systems, we formulate them here in the common framework of the preceding subsection inspired by, but deviating somewhat from, the ideas in Goebel et al. (2012, §1.4.3). In particular, we take $x = (z^T, q, \tau, k)^T \in \mathbb{R}^{n+3}$ where z is the continuous-valued state of the switched system, q is the switching variable, τ corresponds to time, and k takes values in the nonnegative integers. Using $t_0 := 0$ and $\{t_i\}_{i=1}^{\mathrm{card}(\mathcal{T})}$ the ordered times of $\mathcal{T}$, define

$$\mathcal{T}_c := \left\{(\tau, k) \in \mathbb{R}_{\geq 0} \times \mathbb{Z}_{\geq 0} : \tau \in [t_k, t_{k+1})\right\} \tag{4a}$$
$$\mathcal{T}_d := \left\{(\tau, k) \in \mathbb{R}_{\geq 0} \times \mathbb{Z}_{\geq 0} : \tau = t_{k+1}\right\}. \tag{4b}$$

See Fig. 2. The flow set $C \subset \mathbb{R}^{n+3}$ and jump set $D \subset \mathbb{R}^{n+3}$ are defined as

$$C := \mathbb{R}^n \times Q \times \mathcal{T}_c, \qquad D := \mathbb{R}^n \times Q \times \mathcal{T}_d$$

and the drift term f and diffusion term h are given as

$$f(x) := \begin{bmatrix} b_q(z, \tau) \\ 0 \\ 1 \\ 0 \end{bmatrix}, \qquad h(x) := \begin{bmatrix} \sigma_q(z, \tau) \\ 0 \\ 0 \\ 0 \end{bmatrix}.$$

The jump-rate function λ satisfies $\lambda(x) = 0$ for all $x \in C$ since spontaneous transitions are not allowed. The transition function R is such that $R_C \equiv 0$ and, for $x = (z^T, q, \tau, k)^T \in D$,

$$R_D(x, \{(z^T, s(\tau), \tau, k+1)^T\}) = 1. \tag{5}$$

Due to this definition, there is no randomness in the values to which the switching signal jumps.

Stochastic impulsive systems comprise a simple extension of stochastic switched systems described above. In these systems, at

the times when q switches its value, the state z may also experience an instantaneous change, or impulse. Thus, in place of (5), we have for $x = (z^T, q, \tau, k)^T \in D$, that

$$R_D(x, \{(g_q(z, \tau)^T, s(\tau), \tau, k+1)^T\}) = 1 \tag{6}$$

where $g_q(z, \tau)$ is the value of z after a jump from $x = (z^T, q, \tau, k)^T$. Again, there is no randomness in the values to which the state jumps. Stochastic impulsive systems are studied in Wu et al. (2004).

By abuse of notation, we denote the functions $V \in \mathcal{D}_{(\mathcal{H},\mathcal{S})}$ as $(z, q, \tau, k) \mapsto V_{q,k}(z, \tau)$. Because $\lambda(x) = 0$ for all $x \in C$, it follows for these systems that

$$\mathcal{L}V_{q,k}(z, \tau) = \left\langle \nabla V_{q,k}(z, \tau), \begin{bmatrix} b_q(z, \tau) \\ 1 \end{bmatrix} \right\rangle + \frac{1}{2}\mathrm{tr}\left(\sigma_q(z, \tau)\sigma_q(z, \tau)^T \nabla_z^2 V_{q,k}(z, \tau)\right) \quad \forall x \in C \cap S. \tag{7}$$

Also, because of the form of R, and the form of D,

$$\Delta V_{q,k}(z, \tau) = V_{s(\tau),k+1}(g_q(z, \tau), \tau) - V_{q,k}(z, \tau) \quad \forall x \in D \cap S. \tag{8}$$

3.2. Systems with spontaneous jumps

3.2.1. Markov jump systems and switching diffusions

An alternative to stochastic switched or impulsive systems is when there is randomness in the timing and value of the switching parameter q and, in the case of impulsive systems, randomness in the values of the state jumps. This is the situation in the literature on Markov jump linear systems (Mariton, 1990) and nonlinear Markov jump systems (Chatterjee & Liberzon, 2006a, 2007; Zhu et al., 2009), where the flows in between jumps are deterministic, and hybrid switching diffusions (Ghosh et al., 1991, 1993; Hanson, 2007; Mao, 1999; Mao & Yuan, 2006; Yin & Zhu, 2010) and impulsive switching diffusions (Yang et al., 2009), where the flows are stochastic via the stochastic differential equation $dz = b_q(z)dt + \sigma_q(z)dw$. The state z may include ordinary time as a component; in contrast to Section 3.1, we do not make time an explicit state variable here since the jumps in these systems are not typically triggered by the value of the time variable. For Markov-jump systems and switching diffusions, usually there are no state impulses and the switching is generated by a continuous-time Markov chain, where the times spent in each mode are independent and identically distributed (i.i.d.) with an exponential distribution; more specifically, for all $i \neq j$ and $\varepsilon \geq 0$, $\mathbb{P}(\mathbf{q}(t+\varepsilon) = j \mid \mathbf{q}(t) = i) = \nu_{ij}\varepsilon + o_{ij}(\varepsilon)$ where $\lim_{\varepsilon\to 0^+} o_{ij}(\varepsilon)/\varepsilon = 0$ and $\nu_{ij} \geq 0$ for all $i \neq j$. More generally, the transition probabilities ν_{ij} may depend on the state z so that, for all $i \neq j$ and $\varepsilon > 0$,

$$\mathbb{P}\left(\mathbf{q}(t+\varepsilon) = j \mid \mathbf{q}(t) = i, (\mathbf{z}(s), \mathbf{q}(s)), s \leq t\right) = \nu_{ij}(\mathbf{z}(t))\varepsilon + o_{ij}(\varepsilon). \tag{9}$$

This feature permits approximating systems that have forced transitions at certain locations in the state space, as discussed in more detail in Hespanha (2005, Section 2.2).

In terms of the framework of Section 2.2 and using the functions $\nu_{ij} : \mathbb{R}^n \to \mathbb{R}_{\geq 0}$ in (9), switching diffusions have state $x := (z^T, q)^T \in \mathbb{R}^{n+1}$, a drift term and diffusion term given as

$$f(x) := \begin{bmatrix} b_q(z) \\ 0 \end{bmatrix}, \qquad h(x) := \begin{bmatrix} \sigma_q(z) \\ 0 \end{bmatrix},$$

a flow set $C := \mathbb{R}^n \times Q$, a jump-rate function

$$\lambda_q(z) := \sum_{j \in Q\setminus\{q\}} \nu_{qj}(z) \quad \forall (z, q) \in \mathbb{R}^n \times Q \tag{10}$$

and a transition function R satisfying

$$R_C((z^T, i)^T, \{(z^T, j)^T\}) = \nu_{ij}(z)/\lambda_i(z) \quad \forall (z, i, j) \in \mathbb{R}^n \times \{(i, j) \in Q \times Q : i \neq j\}. \tag{11}$$

The jump set D is empty. Thus, the only relevant operator is $\mathcal{L}$. By abuse of notation, we write $V \in \mathcal{D}_{(\mathcal{H},\mathcal{S})}$ as $(z, q) \mapsto V_q(z)$, in which case

$$\mathcal{L}V_q(z) = \langle \nabla V_q(z), b_q(z)\rangle + \frac{1}{2}\mathrm{tr}\left(\sigma_q(z)\sigma_q(z)^T \nabla^2 V_q(z)\right) + \sum_{j \in Q\setminus\{q\}} \nu_{qj}(z)\left(V_j(z) - V_q(z)\right) \quad \forall (z, q) \in \mathbb{R}^n \times Q. \tag{12}$$

3.2.2. Impulsive systems driven by renewal processes

In stochastic impulsive systems driven by renewal processes (Antunes et al., 2010, 2012, 2013a,b; Hespanha & Teel, 2006), the mode variable can be thought of as part of the state x, the values of the entire state after a jump may be affected by a random variable, and the amounts of flow time between jumps are i.i.d. but not necessarily exponentially distributed. These systems are usually written (see Hespanha & Teel, 2006, (6)) as

$$dx = f(x)dt + h(x)dw + \int_\Psi (g(x, v) - x)n(dv, dt)$$

where n is an integer-valued random measure with associated family of measures $\mu(x, \cdot)$, $x \in C$, defined on the measure space $(\Psi, \mathfrak{B}(\Psi))$, that characterize the intensity of the integer-valued jump process, and $g : \mathbb{R}^n \times \Psi \to \mathbb{R}^n$ describes the value of the state after a jump. Often it is possible to transform the functions μ and g into the jump-rate function λ and transition function R_C of Section 2.2 and construct solutions via the algorithm of Section 2.2. See, for example, Antunes et al. (2010, Execution 4 and Proposition 5). In its direct form, for $V \in \mathcal{D}_{(\mathcal{H},\mathcal{S})}$, where $\mathcal{H}$ here refers to the data of the stochastic impulsive system driven by a renewal processes, $\int_\Psi (V(g(x, v)) - V(x))\mu(x, dv)$ plays the role of $\lambda(x)\left(\int_C V(y)R_C(x, dy) - V(x)\right)$ in (2a), resulting in the infinitesimal generator expression

$$\mathcal{L}V(x) = \langle \nabla V(x), f(x)\rangle + \frac{1}{2}\mathrm{tr}\left(h(x)h(x)^T \nabla^2 V(x)\right) + \int_\Psi (V(g(x, v)) - V(x))\mu(x, dv) \quad \forall x \in C \cap S. \tag{13}$$

For more details, see Hespanha and Teel (2006).

3.2.3. Diffusions driven by Lévy processes

Another example of a stochastic hybrid system is a stochastic differential equation driven by a Lévy process, the latter which generalizes a Wiener process by allowing Càdlàg sample paths while maintaining independent, stationary increments. Such systems are studied in Applebaum (2009) for example. They can be viewed in the same vein as the impulsive systems driven by renewal processes of the previous section. Indeed, with the help of the Lévy–Itô Decomposition Theorem (Applebaum, 2009, Theorem 2.4.16), these equations are often written as

$$dx = f(x)dt + h(x)dw + \int_{|y|<c} k(x, y)\tilde{N}(dy, dt) + \int_{|y|\geq c} k(x, y)N(dy, dt)$$

where w is a Wiener process, N is a Poisson random measure with intensity measure ν, $\tilde{N}$ is the compensated Poisson random measure $\tilde{N}(dy, dt) = N(dy, dt) - \nu(dy)dt$, and $c \geq 0$; see Applebaum (2009, (6.12)) for example. In this case, the term $\int_{|y|<c} k(x, y)\nu(dy)dt =: f_L(x)dt$, which is part of the term due

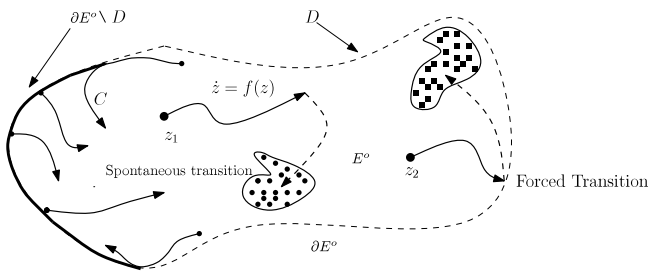

Fig. 3. Data and behavior of solutions to a PDMP.

to the compensated Poisson random process, can be incorporated into the drift term. The remaining Poisson random measure is then dealt with as in the previous subsection, resulting in the infinitesimal generator expression

$$\mathcal{L}V(x) = \langle \nabla V(x), f(x) - f_L(x) \rangle + \frac{1}{2}\mathrm{tr}\left(h(x)h(x)^T \nabla^2 V(x)\right) + \int (V(x + k(x, y)) - V(x))\nu(dy) \quad \forall x \in C \cap S. \tag{14}$$

Compare with (13) and also see Applebaum (2009, (6.36)) or Applebaum and Siakalli (2009, (2.4)).

3.2.4. Impulsive SDEs with Markovian switching

Impulsive stochastic differential equations with Markovian switching combine the spontaneous jumps of hybrid switching diffusions with the jumps forced in time that appear in impulsive stochastic differential equations. Such systems are studied by Hu et al. (2006) and Wu and Sun (2006) for example. They possess the state $x = (z^T, q, \tau, k)^T$, like switched and impulsive stochastic systems. The infinitesimal generator for forced jumps remains (8) while the infinitesimal generator for flows with spontaneous jumps combines (7) and (12) to give, for all $x \in C \cap S$,

$$\begin{aligned}\mathcal{L}V_{q,k}(z, \tau) = &\left\langle \nabla V_{q,k}(z, \tau), \begin{bmatrix} b_q(z, \tau) \\ 1 \end{bmatrix} \right\rangle \\ &+ \frac{1}{2}\mathrm{tr}\left(\sigma_q(z, \tau)\sigma_q(z, \tau)^T \nabla_z^2 V_{q,k}(z, \tau)\right) \\ &+ \sum_{j \in Q \setminus \{q\}} \nu_{qj}(z, \tau, k)(V_{j,k}(z, \tau) - V_{q,k}(z, \tau)).\end{aligned} \tag{15}$$

3.3. Piecewise-deterministic Markov processes

Compared to stochastic impulsive systems driven by renewal processes, piecewise-deterministic Markov processes (Davis, 1984, 1993; Hordijk & van der Duyn Schouten, 1984; Jacobsen, 2006; Yushkevich, 1983, 1986) insist that the flows evolve deterministically, so that the diffusion term satisfies $h(x) = 0$ for all $x \in C$; on the other hand, in addition to jumps that happen at random times, they allow for jumps to occur when the state reaches particular points in the state space. In particular, C and D are constructed from an open set $E^\circ \subset \mathbb{R}^n$ and the drift term f as follows (for an illustration see Fig. 3):

(♯) D is the set of points in the boundary of E°, denoted ∂E°, that can be approached in finite time by a solution of the constrained differential equation $z \in E^\circ, \dot{z} = f(z)$[2];

[2] This set is sometimes further refined by removing from it points that are reached by the construction in Section 2.2 with probability zero. For more information, see Davis (1993, p. 61).

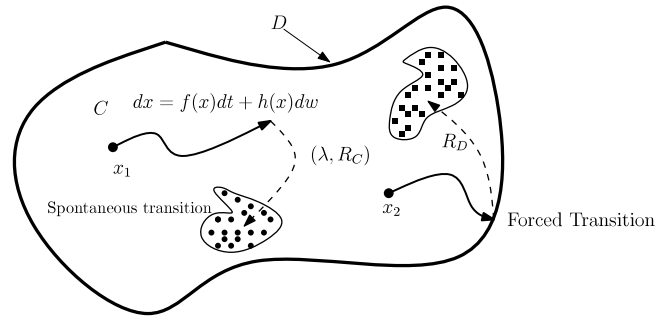

Fig. 4. Data and behavior of solutions to a general SHS.

(♭) C is the union of E° and the set of points in $\partial E^\circ \setminus D$ that can be approached in finite time by a solution of constrained differential equation $z \in E^\circ, \dot{z} = -f(z)$.

In the case where the state has the form $x = (z^T, q)^T \in \mathbb{R}^{n+1}$ where q takes values in a countable set Q, the sets C and D are constructed from a family of open sets $E_q^\circ \subset \mathbb{R}^n$ and drift terms f_q, $q \in Q$, using the rules above to construct D_q and C_q and then taking

$$C := \cup_{q \in Q}(C_q \times \{q\}), \qquad D := \cup_{q \in Q}(D_q \times \{q\}).$$

3.4. General stochastic hybrid systems

Compared to piecewise-deterministic Markov processes, general stochastic hybrid systems (Bujorianu, 2012; Bujorianu & Lygeros, 2006) allow for the flows to satisfy a stochastic differential equation. However, to accommodate for this possibility, more structure is imposed on the sets C and D. In particular, C is taken to be an open set $X \subset \mathbb{R}^n$ and D is taken to be the boundary of X, that is, ∂X. For an illustration, see Fig. 4. Or, with state of the form $x = (z^T, q)^T \in \mathbb{R}^{n+1}$ with q taking values in a countable set Q, the sets C and D are constructed from the family of open sets $X_q \subset \mathbb{R}^n$, $q \in Q$, as

$$C := \cup_{q \in Q}\left(X_q \times \{q\}\right), \qquad D := \cup_{q \in Q}\left(\partial X_q \times \{q\}\right).$$

A similar framework is adopted in Wu et al. (2013) though spontaneous transitions are not considered there and the continuous variable z does not change at jumps.

3.5. Stochastic hybrid inclusions

Stochastic hybrid systems that do not fit the framework of Section 2.2 are the stochastic hybrid inclusions considered by Teel (2013). In those models, solutions are measurable mappings from Ω to the set of not identically empty outer semicontinuous mappings from $\mathbb{R}^2$ to $\mathbb{R}^n$ (Rockafellar & Wets, 1998, Theorem 5.50), where the values of the mapping are hybrid arcs, the latter defined in Goebel et al. (2012, Ch. 2) for example. As such, these models do not insist that the expected value of the number of jumps in each finite time interval is bounded. In fact, Zeno or purely discrete-time solutions are allowed. The sample paths satisfy modeling constraints written formally as

$$x \in C \qquad \dot{x} \in F(x) \tag{16a}$$

$$x \in D \qquad x^+ \in G(x, v) \tag{16b}$$

where v is generated by a sequence of i.i.d. random variables with a given distribution μ.

In (16), both F and G are allowed to be set-valued mappings, and there is no requirement that C and D are disjoint. In particular, there are several potential sources of non-uniqueness of solutions from a given initial condition. SHS that allow non-unique solutions

are atypical; another modeling effort that moves in this direction can be found in Bujorianu and Bujorianu (2012) though, in contrast to Teel (2013), the work Bujorianu and Bujorianu (2012) does not address stability analysis.

While the flow map in (16) is a set-valued mapping, there are no diffusion terms that appear in the flows in (16a). This limitation is partially explained by the fact that the literature on stochastic differential inclusions is not yet fully mature; some notable progress has been made, references include Aubin, Da Prato, and Frankowska (2000), Kisielewicz (1997), Kisielewicz (2013), Motyl (1995), and Prato and Frankowska (1994), and it should not be difficult to eventually incorporate these and future results into the framework (16). Some initial efforts in this direction can be found in Teel (2014a).

Spontaneous transitions are modeled in (16) using timer variables that are set to random positive values and that decrease according to some jump-rate function until reaching the value zero, where a jump is forced. The framework also allows for modeling switched systems where the switching times are not predetermined but are, for example, chosen to be the worst-case switching times for each sample path, perhaps consistent with some average dwell-time switching constraint (Hespanha & Morse, 1999).

4. Stability concepts

4.1. Background material

Most of the SHS considered in the literature admit a unique solution from a given initial condition. However, in characterizing asymptotic stability there is no reason to insist on uniqueness. Hence, given an initial condition $\zeta \in \mathbb{R}^n$ or a set of initial conditions $K \subset \mathbb{R}^n$, we use $\mathcal{S}(\zeta)$ or $\mathcal{S}(K)$ to denote the set of all possible solutions starting from the point ζ or from points in K. We also use $\mathcal{S} := \mathcal{S}(\mathbb{R}^n)$.

It is common to study asymptotic stability for an equilibrium point, often taken to be the origin without loss of generality. However, sometimes the state of a hybrid system includes logic variables or timers that do not settle to a particular value. For a discussion of this phenomenon for non-stochastic hybrid systems, see Goebel, Sanfelice, and Teel (2009, p. 58). Consequently, we state stability properties for closed sets. For a point $x \in \mathbb{R}^n$ and a closed set $\mathcal{A} \subset \mathbb{R}^n$, $|x|_{\mathcal{A}} := \inf_{y\in\mathcal{A}} |x - y|$ denotes the distance of x to the set $\mathcal{A}$. In addition, given $\varepsilon > 0$, $\mathcal{A}+\varepsilon\mathbb{B}^\circ := \{x \in \mathbb{R}^n : |x|_{\mathcal{A}} < \varepsilon\}$ and $\mathcal{A} + \varepsilon\mathbb{B} := \{x \in \mathbb{R}^n : |x|_{\mathcal{A}} \le \varepsilon\}$. The number of distinct stability concepts is much richer for stochastic systems than it is for non-stochastic systems. This fact has been highlighted previously in the literature, especially in Kozin (1969). In what follows, we focus on *global exponential stability*, *global asymptotic stability*, and *recurrence* for stochastic hybrid systems. Global asymptotic stability involves three sub-properties: *Lyapunov stability*, *Lagrange stability*, and *global attractivity*. Each one of these properties has uniform and non-uniform versions. Moreover, there are versions expressed in terms of expected values and versions expressed in terms of probabilities.

4.2. Exponential stability

For a system with solution set $\mathcal{S}$, the closed set $\mathcal{A} \subset \mathbb{R}^n$ is said to be *globally exponentially stable in the pth mean* ($p > 0$) if there exist $k > 0$ and $\gamma > 0$ such that $\mathbb{E}\left[|\mathbf{x}(t)|^p_{\mathcal{A}}\right] \le k|\zeta|^p_{\mathcal{A}} \exp(-\gamma t)$ for each $\zeta \in \mathbb{R}^n$, $\mathbf{x} \in \mathcal{S}(\zeta)$, and $t \ge 0$. This definition appears in the SHS literature in the statement and proof of Liu and Mu (2006, Definition 2.3), Mao (1999, Theorem 3.1), Yin and Zhu (2010, Definition 7.4(v)), and Zhu et al. (2009, Definition 2.1(iii)); see also Khasminskii (2012, §5.7). According to Jensen's inequality (see Fristedt & Gray, 1997, p. 69, Proposition 12), for $\alpha : \mathbb{R}_{\ge 0} \to \mathbb{R}_{\ge 0}$ convex and zero at zero and $p > 0$, $\alpha\left(\mathbb{E}\left[|\mathbf{x}(t)|^p_{\mathcal{A}}\right]\right) \le \mathbb{E}\left[\alpha\left(|\mathbf{x}(t)|^p_{\mathcal{A}}\right)\right]$ for each $\mathbf{x} \in \mathcal{S}$ and all $t \ge 0$. The special case $\alpha(s) := s^q$ with $q > 1$ leads to the conclusion that global exponential stability in the (qp)th mean with $q > 1$ and $p > 0$ implies global exponential stability in the pth mean.

Almost sure global exponential stability can also be considered, though we do not do so here; see Khasminskii (2012, §5.8) for a discussion of this property and Mao (1999, Theorem 3.2) which links global exponential stability in the pth mean and almost sure global exponential stability for hybrid switching diffusions.

4.3. Lyapunov stability

Loosely speaking, Lyapunov stability of a closed set $\mathcal{A}$ entails the phenomenon that if the initial condition is close to $\mathcal{A}$ then the solution should stay close to $\mathcal{A}$ in some probabilistic sense. We can formulate Lyapunov stability in the pth mean or Lyapunov stability in probability, with uniform and non-uniform versions of either property.

For a system with solution set $\mathcal{S}$, the closed set $\mathcal{A} \subset \mathbb{R}^n$ is said to be *Lyapunov stable in the pth mean* ($p > 0$) if $\lim_{i\to\infty} \sup_{t\ge 0} \mathbb{E}\left[|\mathbf{x}_i(t)|^p_{\mathcal{A}}\right] = 0$ for each sequence $\mathbf{x}_i \in \mathcal{S}(\zeta_i)$ and each bounded sequence ζ_i satisfying $\lim_{i\to\infty} |\zeta_i|_{\mathcal{A}} = 0$. It is said to be *uniformly Lyapunov stable in the pth mean* if, for each $\varepsilon > 0$, there exists $\delta > 0$ such that $\mathbb{E}\left[|\mathbf{x}(t)|^p_{\mathcal{A}}\right] \le \varepsilon$ for each $\mathbf{x} \in \mathcal{S}(\mathcal{A} + \delta\mathbb{B})$ and all $t \ge 0$. It is said to be *Lyapunov stable in probability* if, for each $\varepsilon > 0$, $\lim_{i\to\infty} \mathbb{P}\left(\sup_{t\ge 0} |\mathbf{x}_i(t)|_{\mathcal{A}} \le \varepsilon\right) = 1$ for each sequence $\mathbf{x}_i \in \mathcal{S}(\zeta_i)$ and each bounded sequence ζ_i satisfying $\lim_{i\to\infty} |\zeta_i|_{\mathcal{A}} = 0$. It is said to be *uniformly Lyapunov stable in the probability* if, for each $\varepsilon > 0$ and $\rho > 0$, there exists $\delta > 0$ such that $\mathbb{P}\left(\sup_{t\ge 0} |\mathbf{x}(t)|_{\mathcal{A}} \le \varepsilon\right) \ge 1 - \rho$ for each $\mathbf{x} \in \mathcal{S}(\mathcal{A} + \delta\mathbb{B})$. Lyapunov stability in probability is a local property; that is to say, it is concerned only with the behavior of the solutions while they are near the set $\mathcal{A}$. Moreover, when $\mathcal{A}$ is compact there is no distinction between Lyapunov stability and uniform Lyapunov stability, both in probability and in the pth mean.

Lemma 4.1. *If $\mathcal{A} \subset \mathbb{R}^n$ is compact then Lyapunov stability in probability (resp., in the pth mean) is equivalent to uniform Lyapunov stability in probability (resp., in the pth mean).* ■

Proof. The "in probability" result is established here; the proof of the "in the pth mean" result follows the same lines. It is evident that uniform Lyapunov stability in probability implies Lyapunov stability in probability, even when $\mathcal{A}$ is not compact. Suppose $\mathcal{A}$ is compact but not uniformly Lyapunov stable in probability. In particular, there exist $\varepsilon > 0$ and $\rho > 0$ such that, for each positive integer i, there exists $\mathbf{x}_i \in \mathcal{S}(\mathcal{A} + i^{-1}\mathbb{B})$ such that $\mathbb{P}\left(\sup_{t\ge 0} |\mathbf{x}_i(t)|_{\mathcal{A}} \le \varepsilon\right) < 1-\rho$. Since the sequence of sets $\mathcal{A}+i^{-1}\mathbb{B}$ is bounded it follows that $\mathcal{A}$ is not Lyapunov stable in probability, which establishes the result. ■

The definition of Lyapunov stability in probability, for particular compact sets, appears in the SHS literature in Dimarogonas and Kyriakopoulos (2004, Definition 1), Liu and Mu (2008, §3), Liu and Mu (2009, §3), Yin and Zhu (2010, Definitions 7.4(i) and 9.2(i)), and Zhu et al. (2009, Definition 2.1(i)); see also Khasminskii (2012, §5.3). The definition of Lyapunov stability in probability for closed sets appears in its non-uniform version in Luo (2006, Definition 3.3) and in its uniform version in Teel (2013, §2.3).

4.4. Lagrange stability

Lagrange stability focuses not on the behavior near the attractor $\mathcal{A}$ but rather the behavior far from $\mathcal{A}$. For a system with solution set $\mathcal{S}$, the closed set $\mathcal{A} \subset \mathbb{R}^n$ is said to be *Lagrange stable in the pth mean* ($p > 0$), if $\sup_{t\ge 0} \mathbb{E}\left[|\mathbf{x}(t)|^p_{\mathcal{A}}\right] < \infty$ for each $\mathbf{x} \in \mathcal{S}$. It

is said to be *uniformly Lagrange stable in the pth mean* if, for each $\delta > 0$, there exists $\varepsilon > 0$ such that $\mathbb{E}\left[|\mathbf{x}(t)|_{\mathcal{A}}^p\right] \leq \varepsilon$ for each $\mathbf{x} \in \mathcal{S}(\mathcal{A} + \delta\mathbb{B})$ and all $t \geq 0$. It is said to be *Lagrange stable in probability* if $\lim_{i\to\infty} \mathbb{P}\left(\sup_{t\geq 0} |\mathbf{x}(t)|_{\mathcal{A}} \leq i\right) = 1$ for each $\mathbf{x} \in \mathcal{S}$. It is said to be *uniformly Lagrange stable in probability* if, for each $\delta > 0$ and $\rho > 0$, there exists $\varepsilon > 0$ such that $\mathbb{P}\left(\sup_{t\geq 0} |\mathbf{x}(t)|_{\mathcal{A}} \leq \varepsilon\right) \geq 1 - \rho$ for each $\mathbf{x} \in \mathcal{S}(\mathcal{A} + \delta\mathbb{B})$. Lagrange stability and uniform Lagrange stability are not equivalent, even for a compact set $\mathcal{A}$. See Example 4.3 below for an illustration. The concept of non-uniform Lagrange stability in probability of the origin appears in the SHS literature in Liu and Mu (2008, Corollary 1) and Liu and Mu (2009, Corollary 3.1), where it is referred to as a boundedness property, while the definition of uniform Lagrange stability in probability of a general closed set appears in Teel (2013, §2.3).

Another version of Lagrange stability that is useful as an intermediate step in the analysis of recurrence properties discussed later is conditional Lagrange stability of a closed set $\mathcal{A}$ relative to an open set $\mathcal{O}$. The closed set $\mathcal{A} \subset \mathbb{R}^n$ is said to be *conditionally Lagrange stable in probability relative to* $\mathcal{O} \subset \mathbb{R}^n$ if $\lim_{i\to\infty} \mathbb{P}\left(\sup_{t\in[0,\mathbf{S}_{\mathcal{O}})} |\mathbf{x}(t)|_{\mathcal{A}} \leq i\right) = 1$, where $\mathbf{S}_{\mathcal{O}} := \inf\{t \geq 0 : \mathbf{x}(t) \in \mathcal{O}\}$, for each $\mathbf{x} \in \mathcal{S}$. It is said to be *uniformly conditionally Lagrange stable in probability relative to the open set* $\mathcal{O}$ if, for each $\delta > 0$ and $\rho > 0$, there exists $\varepsilon > 0$ such that $\mathbb{P}\left(\sup_{t\in[0,\mathbf{S}_{\mathcal{O}})} |\mathbf{x}(t)|_{\mathcal{A}} \leq \varepsilon\right) \geq 1 - \rho$ for each $\mathbf{x} \in \mathcal{S}(\mathcal{A} + \delta\mathbb{B})$.

4.5. Attractivity

Loosely speaking, global attractivity of a closed set $\mathcal{A}$ is the property that the solutions converges to $\mathcal{A}$ in an appropriate probabilistic sense.

For a system with solution set $\mathcal{S}$, the closed set $\mathcal{A} \subset \mathbb{R}^n$ is said to be *globally attractive in the pth mean* if $\lim_{t\to\infty} \mathbb{E}\left[|\mathbf{x}(t)|_{\mathcal{A}}^p\right] = 0$ for each $\mathbf{x} \in \mathcal{S}$. It is said to be *uniformly, globally attractive in the pth mean* if, for each $r > 0$ and $\varepsilon > 0$, there exists $T > 0$ such that $\mathbb{E}\left[|\mathbf{x}(t)|_{\mathcal{A}}^p\right] \leq \varepsilon$ for all $\mathbf{x} \in \mathcal{S}(\mathcal{A} + r\mathbb{B})$ and $t \geq T$. It is said to be *globally attractive in probability* if $\lim_{T\to\infty} \mathbb{P}\left(\sup_{t\geq T} |\mathbf{x}(t)|_{\mathcal{A}} \leq \varepsilon\right) = 1$ for each $\mathbf{x} \in \mathcal{S}$ and $\varepsilon > 0$; equivalently, $\mathbb{P}\left(\lim_{t\to\infty} |\mathbf{x}(t)|_{\mathcal{A}} = 0\right) = 1$. It is said to be *uniformly globally attractive in probability* if, for each $r > 0$, $\varepsilon > 0$, and $\rho > 0$, there exists $T > 0$ such that $\mathbb{P}\left(\sup_{t\geq T} |\mathbf{x}(t)|_{\mathcal{A}} \leq \varepsilon\right) \geq 1 - \rho$ for each $\mathbf{x} \in \mathcal{S}(\mathcal{A} + r\mathbb{B})$. Like for Lagrange stability, global attractivity and uniform global attractivity are not equivalent, even for a compact set $\mathcal{A}$. See Examples 4.1–4.3 below for illustrations of this fact. The attractivity properties defined above are usually considered in conjunction with Lyapunov stability, and perhaps Lagrange stability, to arrive at the asymptotic stability properties defined next.

4.6. Asymptotic stability

4.6.1. Uniform and non-uniform definitions

For a system with solution set $\mathcal{S}$, the closed set $\mathcal{A} \subset \mathbb{R}^n$ is said to be *globally asymptotically stable in the pth mean* if it is Lyapunov stable in the pth mean, Lagrange stability in the pth mean, and globally attractive in the pth mean. A similar property appears in the SHS literature in Yin and Zhu (2010, Definition 7.4(iv)), though it does not include the Lagrange stability component; see also Khasminskii (2012, §5.7).

The closed set $\mathcal{A} \subset \mathbb{R}^n$ is said to be *uniformly, globally asymptotically stable in the pth mean* if it is uniformly Lyapunov stable in the pth mean, uniformly Lagrange stability in the pth mean, and uniformly, globally attractive in the pth mean. This property appears in the SHS literature in Chatterjee and Liberzon (2006b, Definition 3.1 with Remarks 3.4 and 3.5), where more general asymptotic stability concepts are also considered. It also appears in Chatterjee and Liberzon (2007, Remark 9) but without the uniform Lagrange stability component.

The closed set $\mathcal{A} \subset \mathbb{R}^n$ is said to be *globally asymptotically stable in probability* if it is Lyapunov stable in probability and globally attractive in probability. Lagrange stability in probability is not included in this definition because (non-uniform) global attractivity in probability, together with Càdlàg sample paths, implies (non-uniform) Lagrange stability in probability. This definition, or its local version where global attractivity is replaced by local attractivity, is arguably the most commonly used definition of asymptotic stability in the SHS literature. For example, the local version appears in Luo (2006, Definition 3.4), Yin and Zhu (2010, Definitions 7.4(ii) and 9.2(ii)), and Zhu et al. (2009, Definition 2.1(ii)); see also Khasminskii (2012, §5.4). The global version appears in Liu and Mu (2008, §4), Liu and Mu (2009, §4), and Yin and Zhu (2010, Definition 9.2(iii)). A global version that includes uniform Lagrange stability appears in Wu et al. (2013, Definition 5).

The closed set $\mathcal{A} \subset \mathbb{R}^n$ is said to be *uniformly, globally asymptotically stable in probability* if it is uniformly Lyapunov stable in probability, uniformly Lagrange stability in probability, and uniformly, globally attractive in probability. This property appears in the SHS literature in Chatterjee and Liberzon (2006b, Definition 3.2 with Remarks 3.4 and 3.5), along with more general asymptotic stability concepts. A similar definition also appears in Teel (2013, §2.3) for the stochastic hybrid inclusions (16); when checking uniform attractivity in that definition, time is the sum of the amount of ordinary flow time and the number of jumps that have occurred, which is a useful concept when describing asymptotic stability for systems with Zeno and related solutions.

4.6.2. Examples where there is a distinction between non-uniform and uniform asymptotic stability

For closed but not compact sets, it is well known that asymptotic stability and uniform asymptotic stability are not necessarily equivalent, even for smooth ordinary differential equations; see Khalil (2002, §4.5). For compact sets, the situation is more promising, even for hybrid systems. For non-stochastic hybrid systems, weak regularity conditions, as found in Goebel, Hespanha, Teel, Cai, and Sanfelice (2004), Goebel et al. (2009), Goebel et al. (2012, Ch. 7), or Goebel and Teel (2006), are sufficient for Lyapunov stability plus global attractivity to imply uniform Lagrange stability and uniform global attractivity; hence, asymptotic stability and uniform asymptotic stability are equivalent for hybrid systems satisfying these regularity conditions. For ordinary differential equations, the conditions boil down to the assumption that the right-hand side is continuous; see Kurzweil (1963). For difference equations, the regularity conditions boil down to the assumption that the right-hand side is continuous. For hybrid systems, they include the assumption that the flow set C and the jump set D are closed.

The assumption that C and D are closed is often not satisfied for the systems presented in Section 2.2; indeed, the only scenario where it is possible for C and D to be closed simultaneously in Section 2.2 is when D is empty and C is closed. Even for this case, without extra regularity conditions imposed on the transition rate function λ and the mapping R, the equivalence between uniform and nonuniform stability properties can still fail. This subsection provides a few examples that illustrate the lack of equivalence between global asymptotic stability and uniform global asymptotic stability of a compact set for the systems of Section 2.2.

Example 4.1 (*Markov Jump System with Discontinuous Jump-Rate Function; Attractivity without Uniform Attractivity*)**.** The variables of this example are $z \in \mathbb{R}$ and $q \in \{0, 1\} =: Q$. The z-component of the drift term is $b_q(z) = -qz$ and the diffusion term is identically

zero. The jump-rate and transition functions satisfy (10)–(11) with $\nu_{10}(z) \equiv 0$ and

$$\nu_{01}(z) := \begin{cases} 1 & z \le 1 \\ z-1 & z > 1. \end{cases}$$

In other words, $\lambda_0(z) = \nu_{01}(z)$ for all $z \in \mathbb{R}$, $\lambda_1(z) \equiv 0$, $R_C\left((z,i)^T, \left\{(z,j)^T\right\}\right) = 1$ for $i \in \{0,1\}$ and $j = 1$. We consider global asymptotic stability in probability for the point $\mathcal{A} := \{(0,1)\}$. Since $\nu_{01}(z) > 0$ for all $z \in \mathbb{R}$ and $\dot{z} = 0$ when $q = 0$, it follows that every solution eventually jumps to mode $q = 1$ and then flows exponentially to $\mathcal{A}$ with no additional jumps. Indeed, $\mathcal{A}$ is globally asymptotically stable in probability. However, since $\nu_{01}(z)$ can be made arbitrarily close to zero by taking $z > 1$ arbitrarily close to one, the expected time it takes to switch to mode $q = 1$ can be made arbitrarily large by taking initial conditions $z(0) > 1$ arbitrarily close to one and $q(0) = 0$. Thus $\mathcal{A}$ is not *uniformly* globally asymptotically stable in probability. ■

Example 4.2 (*Stochastic Impulsive System with Discontinuous Transition Function; Attractivity without Uniform Attractivity*)**.** The variable of this example is $x \in \mathbb{R}$. The drift term and diffusion term are identically zero. The jump rate function is identically equal to one. The transition function satisfies $R_C(x, \{g(x)\}) = 1$ for all $x \in \mathbb{R}$, where

$$g(x) := \begin{cases} (\max\{0,x\})^2 & x < 1 \\ 0 & x \ge 1. \end{cases}$$

We consider global asymptotic stability in probability of the origin. Note that every jump moves the state closer to the origin and every infinite sequence of jumps causes x to converge to the origin. However, the number of jumps required to get close to the origin grows without bound as the initial value $\zeta < 1$ approaches the value one. Since the jump rate is constant, it follows that the origin is globally asymptotically stable in probability but not *uniformly* globally asymptotically stable. ■

Example 4.3 (*Piecewise-Deterministic Markov Process, or GSHS, with Non-Closed Flow Set; Lyapunov Stability and Attractivity without Uniform Lagrange Stability or Uniform Attractivity*)**.** As illustrated in Fig. 5, let $E^\circ = E_1^\circ \cup E_2^\circ$ where $E_1^\circ \subset \mathbb{R}^2$ is the open unit disk centered at the origin and $E_2^\circ \subset \mathbb{R}^2$ is the interior of the set

$$\left([2,4] \times \mathbb{R}_{\le 0}\right) \cup \left(\left\{x \in \mathbb{R}^2 : x_1 \ge 2, x_2 \ge 0, (x_1-2)x_2 \le 1\right\}\right).$$

Let the drift term be $f(x) := -x$ for all $x \in \overline{E_1^\circ}$ and $f(x) = (1,0)^T$ for all $x \in \overline{E_2^\circ}$. Let $R_D(x, \{0\}) = 1$ for all x belonging to the boundary of E°. Following the prescriptions in Sections 3.3 and 3.4, for a general stochastic hybrid systems we take $C := E^\circ$ and $D := \partial E^\circ$, whereas for a piecewise-deterministic Markov process we take

$$D := \left(\{4\} \times \mathbb{R}_{\le 0}\right) \cup \left\{x \in \mathbb{R}^2 : x_1 > 2, x_2 > 0, (x_1-2)x_2 = 1\right\}$$
$$C := \overline{E^\circ} \setminus \left(D \cup (\mathbb{R}_{>4} \times \{0\})\right).$$

In either case, every solution that starts in C converges to the origin, either by flowing there exponentially through E_1° or by flowing horizontally through E_2° to reach D and then jumping to the origin and flowing at the origin thereafter. Thus, the origin is Lyapunov stable and globally attractive. On the other hand, because of the definitions of f, C, and D, the flow from initial conditions $\zeta \in C$ that approach the point $(3,0)$ from above take an arbitrarily large amount of time to approach D and produce solutions that become arbitrarily large before jumping to the origin. Therefore, the origin is not *uniformly* Lagrange stable nor *uniformly* globally attractive.

We conclude the example with a remark related to the definition of uniform global asymptotic stability in probability. It is known, even for smooth ordinary differential equations, that uniform Lyapunov stability together with uniform attractivity of a closed not but necessarily compact set does not necessarily imply uniform Lagrange stability of that set; see Teel and Zaccarian (2006, §3) for a non-stochastic example. It is also known, for non-stochastic hybrid systems that satisfy mild regularity conditions, that Lyapunov stability plus (non-uniform) attractivity of a compact set implies uniform attractivity and uniform Lagrange stability of that set; see Goebel et al. (2012, Theorem 7.12). Multiplying the above flow map in $\overline{E_2^\circ}$ by $1 + x_1^4$, so that all flows starting in $C \setminus \overline{E_1^\circ}$ reach the boundary of D within the finite amount of time it takes the solution of $\dot{x}_1 = 1 + x_4^4$ starting at the origin to escape to infinity, demonstrates that uniform attractivity of a compact set does not necessarily imply uniform Lagrange stability of that set without assuming some regularity conditions on the data. ■

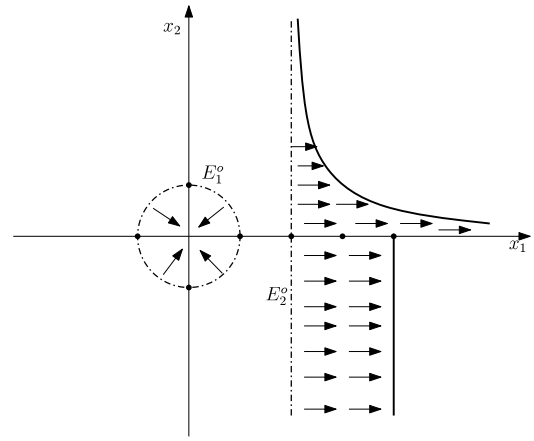

Fig. 5. Data and behavior of solutions for Example 4.3.

The preceding examples inspire the following question:

Open Problem 1. *For a compact set, under which (mild) conditions on the data of $\mathcal{H}$ does Lyapunov stability in probability plus global attractivity in probability imply uniform global asymptotic stability in probability?* ■

We conjecture for compact sets that Lyapunov stability in probability plus global attractivity in probability imply uniform global asymptotic stability in probability when D is empty (the setting of Markov jump systems, hybrid switching diffusions, and stochastic impulsive systems driven by renewal processes), C is closed, λ is continuous, and $R_C(\cdot, A)$ is continuous for each $A \in \mathfrak{B}(C)$. This implication likely follows from the Feller property (Fristedt & Gray, 1997, Def. 10, p. 627), as established in Yin and Zhu (2010, Section 2.5) for hybrid switching diffusions for example. Unfortunately, the Feller property often fails for systems with a nonempty jump set D. To the best of the authors' knowledge, the only statements related to an equivalence between asymptotic stability and uniform asymptotic stability for a compact set that have been made in the SHS literature pertain to the stochastic hybrid inclusions of Section 3.5; see Teel (2013, Proposition 2.2 with Proposition 3.1) and Teel (2014c). Moreover, unfortunately, many stability theorems in the SHS literature assert only Lyapunov stability plus (non-uniform) attractivity when the theorem's assumptions are strong enough to assert uniform global asymptotic stability. This point will be emphasized further in Section 6.

4.7. Recurrence

Throughout the rest of the survey, $\overline{\mathcal{O}}$ denotes the closure of the set $\mathcal{O} \subset \mathbb{R}^n$.

For a system with solution set $\mathcal{S}$, the open set $\mathcal{O} \subset \mathbb{R}^n$ is said to be *recurrent* if $\mathbb{P}(\inf\{t \geq 0 : \mathbf{x}(t) \in \mathcal{O}\} < \infty) = 1$ for each $\mathbf{x} \in \mathcal{S}$. It is said to be *uniformly recurrent* if, for each $r > 0$ and $\rho > 0$, there exists $T > 0$ such that

$$\mathbb{P}(\inf\{t \geq 0 : \mathbf{x}(t) \in \mathcal{O}\} \leq T) \geq 1 - \rho \quad \forall \mathbf{x} \in \mathcal{S}(\overline{\mathcal{O}} + r\mathbb{B}). \tag{17}$$

For a system with solution set $\mathcal{S}$, an open set $\mathcal{O} \subset \mathbb{R}^n$ is said to be *positively recurrent* if, for each $\mathbf{x} \in \mathcal{S}$, $\mathbb{E}[\inf\{t \geq 0 : \mathbf{x}(t) \in \mathcal{O}\}] < \infty$; an open set that is recurrent but not positive recurrent is said to be *null recurrent*. An open set $\mathcal{O} \subset \mathbb{R}^n$ is said to be *uniformly positively recurrent* if for each $r > 0$ there exists $M > 0$ such that

$$\mathbb{E}[\inf\{t \geq 0 : \mathbf{x}(t) \in \mathcal{O}\}] \leq M \quad \forall \mathbf{x} \in \mathcal{S}(\overline{\mathcal{O}} + r\mathbb{B}). \tag{18}$$

The definitions of non-uniform recurrence and positive recurrence appear in the SHS literature in Yin and Zhu (2010, Definition 3.1); see also Khasminskii (2012, §3.7). Uniform recurrence is defined in Teel (2013, §2.4), where again time includes both the amount of ordinary flow time and the number of jumps that have occurred.

Positive recurrence implies recurrence.

Lemma 4.2. *Let $\mathcal{O} \subset \mathbb{R}^n$ be open. Positive recurrence (respectively, uniform positive recurrence) of $\mathcal{O}$ implies recurrence (respectively, uniform recurrence) of $\mathcal{O}$.* ■

Proof. Let $\mathcal{O}$ be uniformly positively recurrent. Let $r > 0$ and $\rho > 0$ be given. Let $M > 0$ be such that (18) holds. Let $T > M/\rho$. Let $\mathbf{x} \in \mathcal{S}(\overline{\mathcal{O}} + r\mathbb{B})$ and define $\mathbf{S} := \inf\{t \geq 0 : \mathbf{x}(t) \in \mathcal{O}\}$. Then, using (18), Markov's inequality (see Fristedt & Gray, 1997, Proposition 3, p. 62) and the prescription on T, we get $\mathbb{P}(\mathbf{S} > T) \leq M/T < \rho$. This bound establishes (17).

The proof for the case where $\mathcal{O}$ is positively recurrent is similar. Given $\mathbf{x} \in \mathcal{S}$, define $\mathbf{S} := \inf\{t \geq 0 : \mathbf{x}(t) \in \mathcal{O}\}$, let $M := \mathbb{E}[\mathbf{S}]$, and note that $\mathbb{P}(\mathbf{S} > T) \leq M/T$. Taking the limit as $T \to \infty$ establishes $\mathbb{P}(\mathbf{S} < \infty) = 1$. ■

This section's subsequent statements, which are based on known results, are used later to establish general principles that cover many stability results in the SHS literature. For example, it is often useful to know that recurrence of an open set $\mathcal{O} \subset \mathbb{R}^n$ follows from conditional Lagrange stability of $\overline{\mathcal{O}}$ relative to $\mathcal{O}$ together with recurrence of the family of larger open sets

$$\mathcal{O}_\theta := \mathcal{O} \cup (\mathbb{R}^n \backslash (\overline{\mathcal{O}} + \theta\mathbb{B})) \tag{19}$$

parametrized by $\theta > 0$.

Lemma 4.3. *The open set $\mathcal{O} \subset \mathbb{R}^n$ is recurrent (respectively, uniformly recurrent) if $\overline{\mathcal{O}}$ is conditionally Lagrange stable in probability (respectively, uniformly conditionally Lagrange stable in probability) relative to $\mathcal{O}$ and, for each $\theta > 0$, the set $\mathcal{O}_\theta$ in (19) is recurrent (respectively, uniform recurrent).* ■

Proof. For uniform recurrence, let $r > 0$ and $\rho > 0$ be given. Using the uniform conditional Lagrange stability in probability of $\overline{\mathcal{O}}$ relative to $\mathcal{O}$, pick $\theta > 0$ sufficiently large to so that

$$\mathbb{P}\left(\sup_{t \in [0, \mathbf{S}_{\mathcal{O}})} |\mathbf{x}(t)|_{\overline{\mathcal{O}}} \leq \theta\right) \geq 1 - \rho/2 \quad \forall \mathbf{x} \in \mathcal{S}(\overline{\mathcal{O}} + r\mathbb{B}). \tag{20}$$

Then pick $T > 0$ sufficiently large so that

$$\mathbb{P}(\inf\{t \geq 0 : \mathbf{x}(t) \in \mathcal{O}_\theta\} \leq T) \geq 1 - \frac{\rho}{2} \quad \forall \mathbf{x} \in \mathcal{S}(\overline{\mathcal{O}} + r\mathbb{B}). \tag{21}$$

Compared to (17), we can use $\overline{\mathcal{O}}$ in place of $\overline{\mathcal{O}_\theta}$ in (21) when limiting the initial conditions of $\mathbf{x}$ since $\overline{\mathcal{O}} \subset \overline{\mathcal{O}_\theta}$. Combining (21) and (20) and using the definition of $\mathcal{O}_\theta$ in (19), we get

$$\mathbb{P}(\inf\{t \geq 0 : \mathbf{x}(t) \in \mathcal{O}\} \leq T) \geq 1 - \rho \quad \forall \mathbf{x} \in \mathcal{S}(\overline{\mathcal{O}} + r\mathbb{B}),$$

which is the desired uniform recurrence property.

For the nonuniform case, given $\rho > 0$, the values $\theta > 0$ and $T > 0$ are chosen sufficiently large as a function of $\mathbf{x}$. ■

As noted in Khasminskii (2012, Theorems 5.5 and 5.7) and Yin and Zhu (2010, Lemma 7.6) (cf. Teel, 2013, Propositions 2.2 and 2.4), the strong Markov property of Assumption 2.1 enables a connection between attractivity in probability and recurrence plus stability in probability.

Lemma 4.4. *Under Assumption 2.1, if the closed set $\mathcal{A} \subset \mathbb{R}^n$ is uniformly Lyapunov stable in probability and, for each $\varepsilon > 0$, the set $\mathcal{A} + \varepsilon\mathbb{B}^\circ$ is recurrent (respectively, uniformly recurrent) then $\mathcal{A}$ is attractive in probability (respectively, uniformly attractive in probability.)* ■

Proof. For uniform attractivity in probability, let $r > 0$, $\varepsilon > 0$ and $\rho > 0$ be given. Using uniform Lyapunov stability in probability, pick $\theta_1 \in (0, \varepsilon]$ sufficiently small so that

$$\mathbb{P}\left(\sup_{t \geq 0} |\mathbf{x}(t)|_{\mathcal{A}} > \varepsilon\right) < \rho/2 \quad \forall \mathbf{x} \in \mathcal{S}(\mathcal{A} + \theta_1\mathbb{B}). \tag{22}$$

Using uniform recurrence, pick $T > 0$ sufficiently large so that, for all $\mathbf{x} \in \mathcal{S}(\mathcal{A} + r\mathbb{B})$,

$$\mathbb{P}(\inf\{t \geq 0 : \mathbf{x}(t) \in \mathcal{A} + \theta_1\mathbb{B}^\circ\} > T) < \rho/2 \tag{23}$$

which can be done since $\mathcal{A} + r\mathbb{B} \subset \mathcal{A} + (\theta_1 + r)\mathbb{B}$. With $\mathbf{S} := \inf\{t \geq 0 : \mathbf{x}(t) \in \mathcal{A} + \theta_1\mathbb{B}^\circ\}$ and the Càdlàg properties of $\mathbf{x}$, it follows that $\mathbf{x}(\mathbf{S}) \in \mathcal{A} + \theta_1\mathbb{B}$ almost surely. In turn, like in the proof of Theorem 5.7 of Khasminskii (2012), it follows from the strong Markov property in Assumption 2.1 together with (22)–(23) that

$$\mathbb{P}\left(\sup_{t \geq T} |\mathbf{x}(t)|_{\mathcal{A}} \leq \varepsilon\right) \geq 1 - \rho \quad \forall \mathbf{x} \in \mathcal{S}(\mathcal{A} + r\mathbb{B}) \tag{24}$$

which is uniform global attractivity.

In the non-uniform case, we pick T in (23) as a function of $\mathbf{x}$. We end up with (24) and thus the desired global attractivity. ■

The following corollary combines Lemmas 4.3 and 4.4 and the straightforward observation that Lagrange stability of $\mathcal{A}$ implies Lagrange stability of $\mathcal{A} + \varepsilon\mathbb{B}$ for each $\varepsilon > 0$.

Corollary 4.1. *Suppose Assumption 2.1 holds and the closed set $\mathcal{A} \subset \mathbb{R}^n$ is uniformly Lyapunov stable in probability. If it is also Lagrange stable (respectively, uniformly Lagrange stable) in probability and, for each pair of real numbers (ε, θ) satisfying $0 < \varepsilon < \theta$, the set*

$$\mathcal{O}_{\varepsilon,\theta} := \left\{x \in \mathbb{R}^n : |x|_{\mathcal{A}} \in \mathbb{R}\backslash[\varepsilon, \theta]\right\} \tag{25}$$

is recurrent (respectively, uniformly recurrent) then the set $\mathcal{A}$ is globally asymptotically stable (respectively, uniformly globally asymptotically stable) in probability. ■

Though we do not take up ergodicity explicitly here, connections between positive recurrence and ergodicity, or the existence of an invariant measure, are frequently made in the stochastic hybrid systems literature. For example, Davis (1993, §34.3) addresses ergodicity for piecewise-deterministic Markov processes by drawing upon Tweedie (1975, Theorem 4.2), which states that, for a ϕ-irreducible Markov chain with strongly continuous transitions, the Lyapunov conditions for positive recurrence of an open bounded set given later in Section 5.3 are sufficient for the existence of a stationary distribution. For other examples, see Mesquita and Hespanha (2010), Yin and Zhu (2010, Chapter 4) or the related asymptotic stability in distribution studied in Yuan and Mao (2003).

On a related note, for non-stochastic hybrid systems satisfying mild regularity conditions, recurrence of an open bounded set implies uniform recurrence of that set (Teel, 2013, Proposition 3.1 contains this result for the stochastic hybrid inclusions of (16) satisfying mild regularity conditions; see also Teel,

Table 2
Stability properties and associated requirements on $(\alpha_1, \alpha_2, \rho)$ appearing in (26). Uniform: $\beta \equiv 1$; nonuniform: $\beta \in \mathscr{L}_\infty^{\text{loc}}$ except nonuniform global asymptotic stability in probability where $\beta \in \mathscr{L}_\infty^{\text{loc}} \cap \mathcal{M}_\mathcal{A}$.

Property	α_1		α_2	ρ
Variant	In probability	In pth mean ($p > 0$)	(Both variants)	(Both variants)
Lagrange stability	$\in \mathcal{G}_\infty$	$\in \mathcal{K}_\infty^{\text{co}} \circ \mathcal{K}^p$	$\in \mathcal{G}_\infty^+$	$\equiv 0$
Lyapunov stability	$\in \mathcal{K}_\infty$	$\in \mathcal{K}_\infty^{\text{co}} \circ \mathcal{K}^p$	$\in \mathcal{K}_\infty$	$\equiv 0$
Global asymptotic stability	$\in \mathcal{K}_\infty$	$\in \mathcal{K}_\infty^{\text{co}} \circ \mathcal{K}^p$	$\in \mathcal{K}_\infty$	$\in \mathcal{P}_\mathcal{A}$(in probability), $\propto V$ (in pth mean)
Global exponential stability	n/a	$\in \mathcal{K}^p$	$\in \mathcal{K}^p$	$\in \mathcal{K}^p$

2014c, Theorem 6), boundedness of the reachable set from each compact set, and uniform global asymptotic stability of the ω-limit set from $\mathcal{O}$; see Goebel et al. (2012, Definition 6.23 and Corollary 7.7) for definitions and related results. In contrast, uniform recurrence of an open bounded set for a SHS does not necessarily imply the existence of a compact asymptotically stable set. For example, the hybrid switching diffusion with $x \in \mathbb{R}$, $C = \mathbb{R}$, $f(x) \equiv 0$, $h(x) \equiv 0$, $\lambda(x) \equiv 1$, and $R(x, \cdot)$ a Gaussian distribution with zero mean and unity variance for all x is such that any open set is uniformly recurrent and yet, as $t \to \infty$, the distribution of $\mathbf{x}(t)$ approaches a Gaussian with zero mean and unity variance.

Taking $\mathcal{O}$ to be a sufficiently small neighborhood of $\mathcal{A}$ for the systems in Examples 4.1–4.3 demonstrates that recurrence does not automatically imply uniform recurrence for SHS. However, as indicated above, at least for the stochastic hybrid inclusions of (16) under the stochastic hybrid basic conditions of Teel (2013, Assumptions 1–2), Teel (2013, Proposition 3.1) shows that recurrence of an open, bounded set implies uniform recurrence of that set. These observations motivate the following question, which is similar to Open Problem 1:

Open Problem 2. *For an open bounded set, under which (mild) conditions on the data of $\mathcal{H}$ does recurrence (respectively, positive recurrence) imply uniform recurrence (respectively, uniform positive recurrence)?* ■

5. Sufficient conditions via Lyapunov functions

5.1. Preliminary definitions

Nearly all of the sufficient conditions contained in the SHS literature for the various forms of stability that were described in the previous section are based on stochastic versions of Lyapunov functions. For a thorough discussion of Lyapunov functions for classical differential equations or for non-stochastic hybrid dynamical systems, see Goebel et al. (2012, Chapters 3 and 7) and Khalil (2002, Chapter 4) respectively. In this section, we summarize Lyapunov-function-based sufficient conditions for Lyapunov stability, Lagrange stability, asymptotic stability, and recurrence (a setting in which Lyapunov functions are often called Foster–Lyapunov functions) in SHS, focusing on global results for simplicity. We work with functions $V \in \mathcal{D}_{(\mathcal{H},S)}$ and the conditions

$$\alpha_1(|x|_\mathcal{A}) \le V(x) \le \alpha_2(|x|_\mathcal{A})\,\beta(x) \quad \forall x \in C \tag{26a}$$

$$\mathcal{L}V(x) \le -\rho(x) \quad \forall x \in C \cap S \tag{26b}$$

$$\Delta V(x) \le 0 \quad \forall x \in D \cap S. \tag{26c}$$

The function $\beta : \mathbb{R}^n \to \mathbb{R}_{\ge 0}$ is assumed to be locally bounded, denoted $\beta \in \mathscr{L}_\infty^{\text{loc}}$, and $\mathcal{A}$ and S are closed. As for α_1, α_2 and ρ, they are constrained to one of the following classes. A function $\alpha : \mathbb{R}_{\ge 0} \to \mathbb{R}_{\ge 0}$ belongs to class-$\mathcal{G}_\infty^+$ if it is continuous, nondecreasing, and unbounded. It belongs to class-$\mathcal{G}_\infty$ if it belongs to class-$\mathcal{G}_\infty^+$ and is zero at zero. It belongs to class-$\mathcal{K}_\infty$ if it belongs to class-$\mathcal{G}_\infty$ and is strictly increasing. It belongs to class-$\mathcal{K}_\infty^{\text{co}}$ if it belongs to class-$\mathcal{K}_\infty$ and is convex. It belongs to class-$\mathcal{K}^p$, where $p > 0$, if there exists $k > 0$ such that $\alpha(s) = ks^p$ for all $s \ge 0$. We write $\alpha \in \mathcal{K}_\infty^{\text{co}} \circ \mathcal{K}^p$ when $\alpha(s) = (\alpha_a \circ \alpha_b)(s)$ for all $s \ge 0$ where $\alpha_a \in \mathcal{K}_\infty^{\text{co}}$ and $\alpha_b \in \mathcal{K}^p$. A function $\rho : C \to \mathbb{R}_{\ge 0}$ belongs to class-$\mathcal{P}_\mathcal{A}$ if, for each $0 < \theta_1 < \theta_2$, there exists $\rho_0 > 0$ such that $\rho(x) \ge \rho_0$ for all $x \in C$ such that $|x|_\mathcal{A} \in [\theta_1, \theta_2]$. A function $\beta : \mathbb{R}^n \to \mathbb{R}_{\ge 0}$ belongs to $\mathcal{M}_\mathcal{A}$ if there exist $\delta > 0$ and $M > 0$ such that $\beta(x) \le M$ for all $x \in \mathcal{A} + \delta\mathbb{B}$.

5.2. Stability

The next theorem summarizes Lyapunov-based sufficient conditions for the stability concepts itemized in Table 2.

Theorem 5.1. *Let Assumption 2.1 hold and let $\mathcal{A} \subset \mathbb{R}^n$ be closed. The uniform (respectively, non-uniform) version of a stability property for $\mathcal{A}$ listed in Table 2 holds if (26) holds for some $V \in \mathcal{D}_{(\mathcal{H},S)}$ where $(\alpha_1, \alpha_2, \rho)$ satisfy the requirements associated with that property in Table 2 with $\beta \equiv 1$ (respectively, $\beta \in \mathscr{L}_\infty^{\text{loc}}$ except for the case of global asymptotic stability in probability where $\beta \in \mathscr{L}_\infty^{\text{loc}} \cap \mathcal{M}_\mathcal{A}$) and $S = \mathbb{R}^n$.* ■

Proof (*Stability in pth Mean*)**.** The statements in Theorem 5.1 concerning Lagrange and Lyapunov stability in the pth mean are direct consequences of implication (3) in Assumption 2.1 together with Jensen's inequality; see Fristedt and Gray (1997, p. 69, Prop. 12).

(*Global asymptotic and exponential stability in the pth mean*) The statements concerning global asymptotic and exponential stability in the pth mean, which involves assumptions implying that, for some $\varepsilon > 0$, $\mathcal{L}V(x) \le -\varepsilon V(x)$ for all $x \in C$, can be derived by making time a state variable (which does not change at jumps) and using the function $W(t, x) := \exp(\varepsilon t)V(x)$, which satisfies, for all $(t, x) \in \mathbb{R}_{\ge 0} \times C$,

$$\mathcal{L}W(t, x) \le -\varepsilon \exp(kt)V(x) + \varepsilon \exp(kt)V(x) = 0.$$

Therefore, from the initial condition $(0, \zeta)$ where $\zeta \in C$,

$$\begin{aligned}\mathbb{E}[V(\mathbf{x}(t))] &= \exp(-\varepsilon t)\mathbb{E}[W(t, \mathbf{x}(t))] \\ &\le \exp(-\varepsilon t)W(0, \zeta) = \exp(-\varepsilon t)V(\zeta).\end{aligned}$$

The various results on global asymptotic and exponential stability in the pth mean now follow from (26a), the properties of α_1, α_2 and β, and Jensen's inequality as above.

(*Stability in probability*) (The arguments here follow Yin & Zhu, 2010, proof of Lemma 7.5, for example.) For each measurable $\mathcal{I} \subset \mathbb{R}_{\ge 0}$, define $\mathbb{I}_\mathcal{I} : \mathbb{R}_{\ge 0} \to \{0, 1\}$ so that $\mathbb{I}_\mathcal{I}(r) = 1$ if and only if $r \in \mathcal{I}$. Let $\varepsilon > 0$ be such that $\alpha_1(\varepsilon) > 0$, let $S_\varepsilon := \mathcal{A} + \varepsilon\mathbb{B}$ and recall the definition $\mathbf{S}_{S_\varepsilon^c} := \inf\{r \ge 0 : \mathbf{x}(r) \in \mathbb{R}^n \backslash S_\varepsilon\}$. Since the sample paths of $\mathbf{x}$ are Càdlàg, it follows that $\mathbb{P}\left(|\mathbf{x}(\mathbf{S}_{S_\varepsilon^c})|_\mathcal{A} \ge \varepsilon\right) = 1$. In addition, due to Assumption 2.1 and the conditions (26b)–(26c) with $\rho \equiv 0$, $\mathbb{E}\left[V(\mathbf{x}(t \wedge \mathbf{S}_{S_\varepsilon^c}))\right] \le V(\zeta)$. These two facts and the lower bound in (26a) give that

$$\begin{aligned}\alpha_1(\varepsilon)\mathbb{E}\left[\mathbb{I}_{[0,t)}(\mathbf{S}_{S_\varepsilon^c})\right] &\le \mathbb{E}\left[V(\mathbf{x}(\mathbf{S}_{S_\varepsilon^c}))\mathbb{I}_{[0,t)}(\mathbf{S}_{S_\varepsilon^c})\right] \\ &\le \mathbb{E}\left[V(\mathbf{x}(\mathbf{S}_{S_\varepsilon^c}))\mathbb{I}_{[0,t)}(\mathbf{S}_{S_\varepsilon^c})\right. \\ &\quad \left. + V(\mathbf{x}(t))\mathbb{I}_{[t,\infty)}(\mathbf{S}_{S_\varepsilon^c})\right] \\ &= \mathbb{E}\left[V(\mathbf{x}(t \wedge \mathbf{S}_{S_\varepsilon^c}))\right] \le V(\zeta).\end{aligned}$$

Table 3
Recurrence properties and associated requirements on $(\alpha_1, \alpha_2, \rho)$ appearing in (26). Uniform: $\beta \equiv 1$; nonuniform $\beta \in \mathscr{L}_\infty^{\text{loc}}$.

Property	α_1	α_2	ρ
(Null) recurrence	$\in \mathscr{G}_\infty$	$\in \mathscr{G}_\infty^+$	$\in \mathscr{P}_\mathcal{A}$
Positive recurrence	$\equiv 0$	$\in \mathscr{G}_\infty^+$	$\equiv \rho_0 > 0$

Then, again using the Càdlàg property of the sample paths of $\mathbf{x}$, observe that, for each $\omega \in \Omega$,

$$\mathbf{S}_{S_\varepsilon^c}(\omega) < t \iff \sup_{s\in[0,t)} |\mathbf{x}_\omega(s)|_\mathcal{A} > \varepsilon.$$

Hence, $\mathbb{P}\left(\sup_{s\in[0,t)} |\mathbf{x}(s)|_\mathcal{A} > \varepsilon\right) = \mathbb{E}\left[\mathbb{I}_{[0,t)}(\mathbf{S}_{S_\varepsilon^c})\right] \le V(\zeta)/\alpha_1(\varepsilon)$. Taking the limit as $t \to \infty$, using the monotone convergence theorem (see Fristedt & Gray, 1997, Theorem 6, p. 105), and using the upper bound in (26a), we get

$$\mathbb{P}\left(\sup_{s\ge 0} |\mathbf{x}(s)|_\mathcal{A} \le \varepsilon\right) \ge 1 - \frac{\alpha_2(|\zeta|_\mathcal{A})\beta(\zeta)}{\alpha_1(\varepsilon)}.$$

All statements about Lagrange and Lyapunov stability now follow from the properties of α_1, α_2 and β.

(*Asymptotic stability in probability*) According to Corollary 4.1, it is enough to establish recurrence (respectively, uniform recurrence) for the set $\mathcal{O}_{\varepsilon,\theta}$ defined in (25) for each $0 < \varepsilon < \theta$. By assumption, the function ρ in (26b) satisfies $\rho \in \mathscr{P}_\mathcal{A}$. Thus $\rho_0 := \inf_{x\in\mathbb{R}^n\setminus\mathcal{O}_{\varepsilon,\theta}} \rho(x) > 0$. Since (uniform) positive recurrence implies (uniform) recurrence (see Lemma 4.2), asymptotic stability in probability follows from the positive recurrence results of the next subsection. ■

5.3. Recurrence

We start with a result on conditional Lagrange stability.

Proposition 5.1. *Let Assumption 2.1 hold and let $\mathcal{O} \subset \mathbb{R}^n$ be open. The closed set $\overline{\mathcal{O}}$ is conditionally uniformly Lagrange stable in probability (respectively, conditionally Lagrange stable in probability) relative to $\mathcal{O}$ if (26) holds for some $V \in \mathcal{D}_{(\mathcal{H},S)}$ where $(\alpha_1, \alpha_2, \rho)$ satisfy the requirements associated with Lagrange stability in Table 2 with $\beta \equiv 1$ (respectively, $\beta \in \mathscr{L}_\infty^{\text{loc}}$) for some closed $\mathcal{A} \subset \mathbb{R}^n$ satisfying $\mathcal{A} \subset \mathcal{O} \subset \mathcal{A} + \gamma\mathbb{B}$ for some $\gamma > 0$, and $S = \mathbb{R}^n\setminus\mathcal{O}$.* ■

Proof. Since $\mathcal{A}$ is closed, we have $\mathcal{A} \subset \overline{\mathcal{O}} \subset \mathcal{A} + \gamma\mathbb{B}$. Using this relationship and (26a) gives, for all $x \in C$,

$$\begin{aligned}\alpha_1(|x|_{\overline{\mathcal{O}}}) &\le \alpha_1(|x|_\mathcal{A}) \le V(x) \le \alpha_2(|x|_\mathcal{A})\beta(x)\\ &\le \alpha_2(\gamma + |x|_{\mathcal{A}+\gamma\mathbb{B}})\beta(x)\\ &\le \alpha_2(\gamma + |x|_{\overline{\mathcal{O}}})\beta(x).\end{aligned}$$

Therefore, (26a) also holds with $\mathcal{A}$ replaced by $\overline{\mathcal{O}}$ and with α_2 replaced by $s \mapsto \alpha_2(\gamma + s) \in \mathscr{G}_\infty^+$. Then, using the same arguments as those used in the proof of (Lyapunov and Lagrange) stability in probability, we can deduce that, for each $\theta > 0$,

$$\mathbb{P}\left(\sup_{s\in[0,\mathbf{S}_\mathcal{O})} |\mathbf{x}(s)|_{\overline{\mathcal{O}}} > \theta\right) \le \frac{\alpha_2(r)\beta(\zeta)}{\alpha_1(\theta)}.$$

The conditional Lagrange stability (respectively, uniform conditional Lagrange stability) now follows from the properties of α_1 and β. ■

The next theorem summarizes Lyapunov-based sufficient conditions for the recurrence concepts itemized in Table 3. It is possible to weaken the condition on ρ for nonuniform recurrence; Khasminskii (2012, Theorem 3.9) contains one idea in this direction.

Theorem 5.2. *Let Assumption 2.1 hold and let $\mathcal{O} \subset \mathbb{R}^n$ be open. The uniform (respectively, nonuniform) version of a recurrence property for $\mathcal{O}$ listed in Table 3 holds if (26) holds for some $V \in \mathcal{D}_{(\mathcal{H},S)}$ where $(\alpha_1, \alpha_2, \rho)$ satisfy the requirements associated with that property in Table 3 with $\beta \equiv 1$ (respectively, $\beta \in \mathscr{L}_\infty^{\text{loc}}$), some closed $\mathcal{A} \subset \mathbb{R}^n$ satisfying $\mathcal{A} \subset \mathcal{O} \subset \mathcal{A} + \gamma\mathbb{B}$ for some $\gamma > 0$, and $S = \mathbb{R}^n\setminus\mathcal{O}$.* ■

Proof. We use the same preliminary observation made at the start of the proof of Proposition 5.1: due to the conditions on α_1, α_2 and the condition $\mathcal{A} \subset \mathcal{O} \subset \mathcal{A} + \gamma\mathbb{B}$, it follows that (26a) also holds with $\mathcal{A}$ replaced by $\overline{\mathcal{O}}$ and α_2 replaced by $s \mapsto \alpha_2(\gamma + s) \in \mathscr{G}_\infty^+$.

(*Positive recurrence*) Define $\mathbf{S} := \inf\{t \ge 0 : \mathbf{x}(t) \in \mathcal{O}\}$. It follows from implication (3) in Assumption 2.1 and the other assumptions of Theorem 5.2 that

$$0 \le \mathbb{E}[V(\mathbf{x}(t \wedge \mathbf{S}))] \le \alpha_2(|\zeta|_{\overline{\mathcal{O}}})\beta(\zeta) - \rho_0\mathbb{E}[t \wedge \mathbf{S}]$$

and thus $\mathbb{E}[t \wedge \mathbf{S}] \le \alpha_2(|\zeta|_{\overline{\mathcal{O}}})\beta(\zeta)/\rho_0$. It follows that $\mathbf{S}$ is almost surely finite and $\mathbb{P}(\lim_{t\to\infty} t \wedge \mathbf{S} = \mathbf{S}) = 1$. Thus, by the monotone convergence theorem (see Fristedt & Gray, 1997, Theorem 6, p. 105), it follows that $\mathbb{E}[\mathbf{S}] \le \alpha_2(|\zeta|_{\overline{\mathcal{O}}})\beta(\zeta)/\rho_0$. The properties of α_2 and β establish the desired results.

(*Recurrence*) It follows from Proposition 5.1 that $\overline{\mathcal{O}}$ is conditionally Lagrange stable in probability (respectively, uniformly conditionally Lagrange stable in probability) relative to $\mathcal{O}$.

We also claim that the open set

$$\mathcal{O}_\theta := \mathcal{O} \cup (\mathbb{R}^n\setminus(\overline{\mathcal{O}} + \theta\mathbb{B})) \tag{27}$$

is (uniformly) recurrent for each $\theta > 0$, from which (uniform) recurrence of $\mathcal{O}$ would follow from Lemma 4.3. To establish the claim, first note that $\mathbb{R}^n\setminus\mathcal{O}_\theta = (\overline{\mathcal{O}} + \theta\mathbb{B})\setminus\mathcal{O}$. Then note that, since $\mathcal{A} \subset \mathcal{O} \subset \mathcal{A} + \gamma\mathbb{B}$ and $\mathcal{A}$ is closed while $\mathcal{O}$ is open, there exists $\delta > 0$ such that $\mathcal{A} + \delta\mathbb{B} \subset \mathcal{O} \subset \mathcal{A} + \gamma\mathbb{B}$. Combining these observations, we have that $\zeta \in \mathbb{R}^n\setminus\mathcal{O}_\theta$ implies $|\zeta|_\mathcal{A} \in [\delta, \gamma + \varepsilon]$. Then define $\rho_{0,\varepsilon} := \inf_{\zeta\in\mathbb{R}^n\setminus\mathcal{O}_\varepsilon} \rho(\zeta) > 0$ and use the proof of (uniform) positive recurrence given above and Lemma 4.2 to finish the preliminary claim. ■

6. Literature that aligns with basic theorems

6.1. Overview

The main Lyapunov-based sufficient conditions for stability for switched and impulsive stochastic differential equations appear in Chatterjee and Liberzon (2004), Chatterjee and Liberzon (2006b), Dimarogonas and Kyriakopoulos (2004), Feng et al. (2011), Feng and Zhang (2006), Filipovic (2009), and Wu et al. (2004). For Markov jump systems, important references in this direction include Chatterjee and Liberzon (2006a), Chatterjee and Liberzon (2007), and Zhu et al. (2009). Such conditions for hybrid switching diffusions can be found in Hespanha (2005), Luo (2006), Mao (1999), Mao et al. (2007), Mao and Yuan (2006), Yin and Zhu (2010), and Yuan and Lygeros (2005b). Lyapunov-based conditions for stability for stochastic impulsive systems driven by renewal processes include Antunes et al. (2010), Antunes et al. (2013a), Antunes et al. (2013b), and Hespanha and Teel (2006). Lyapunov-based conditions for stability for diffusions driven by Lévy processes can be found in Applebaum and Siakalli (2009) and Zhu (2014). Results for impulsive stochastic systems with Markovian switching are contained in Wu and Sun (2006). The literature contains fewer results for piecewise-deterministic Markov processes and general stochastic hybrid systems, with notable exceptions for the latter class including Liu and Mu (2006, 2008, 2009), and Wu et al. (2013). The focus of Teel (2013) is on Lyapunov-based sufficient conditions for stability for the stochastic hybrid inclusions of (16); it includes results that connect the way (16) handles spontaneous transitions with the way they are handled in Section 2.2, see Teel (2013, §7). In the next few subsections, we draw attention to specific results in the literature for the different types of stability discussed in Section 4.

6.2. Lagrange stability

When the result in Theorem 5.1 on Lagrange stability in probability is specialized to the general stochastic hybrid systems of Section 3.4 and $\mathcal{A} := \{0\} \times Q$ where Q is a finite index set, it covers the assertion of Liu and Mu (2008, Corollary 1) or Liu and Mu (2009, Corollary 3.1),[3] though neither result asserts the stronger *uniform* Lagrange stability. The statement in Theorem 5.1 on uniform Lagrange stability in probability of closed sets is similar to Teel (2013, Theorem 4.1). Otherwise, Lagrange stability, as an isolated property, has not been studied in great detail for stochastic hybrid systems.

6.3. Lyapunov stability

When the results of Theorem 5.1 on Lagrange stability in probability and Lyapunov stability in probability are specialized to switched stochastic systems and $\mathcal{A} := \{0\} \times Q \times (\mathcal{T}_c \cup \mathcal{T}_d)$ where Q is a finite index set, it recovers Dimarogonas and Kyriakopoulos (2004, Theorem 2), which uses a Lyapunov function that depends only on the continuous state z. The result in Dimarogonas and Kyriakopoulos (2004, Theorem 4) is similar but uses a Lyapunov function that depends on q and thus explicitly includes a condition analogous to (26c). When the result of Theorem 5.1 on Lyapunov stability in probability is specialized to nonlinear Markov jump systems and $\mathcal{A} := \{0\} \times Q$ where Q is a finite index set, it has the flavor of the assertion of Zhu et al. (2009, Proposition 2.5), though the conditions in Zhu et al. (2009, Proposition 2.5) are local since Lyapunov stability in probability is a local property. The statement in Yin and Zhu (2010, Lemma 7.5) is similar for stability for hybrid switching diffusions. Again specialized to hybrid switching diffusions, Theorem 5.1 covers Yin and Zhu (2010, Theorem 9.3), which addresses Lyapunov stability in probability for general compact sets, and Luo (2006, Theorem 3.6), which addresses non-uniform Lyapunov stability in probability for closed, but not necessarily, compact sets. Moreover, Yin and Zhu (2010, Lemma 7.5) and Zhu et al. (2009, Proposition 2.5) emphasize that, when it is known a priori that spontaneous jumps from $\mathcal{A}$ do not exit $\mathcal{A}$, it is enough to check the condition (26b) outside of $\mathcal{A}$. This relaxation can be very significant, as it relaxes the regularity requirements for the Lyapunov function on the set $\mathcal{A}$. An example where this relaxation is helpful is in the analysis of the stochastic bouncing ball in Teel (2013, Section 6.1).

Similarly, Applebaum and Siakalli (2009, Theorem 2.3) corresponds to (a local version of) the result in Theorem 5.1 on Lyapunov stability in probability when the latter is specialized to diffusions driven by Lévy processes and $\mathcal{A} = \{0\}$; in addition, the assertion of Liu and Mu (2008, Theorem 1) or Liu and Mu (2009, Theorem 3.1) corresponds to the result in Theorem 5.1 on Lyapunov stability in probability when the latter is specialized to general stochastic hybrid systems of Section 3.4 and $\mathcal{A} := \{0\} \times Q$ where Q is a finite index set.

The statement in Theorem 5.1 on uniform Lyapunov stability in probability of closed sets is similar to Teel (2013, Theorem 4.2).

6.4. Asymptotic stability

For the most part, the assertion of Zhu et al. (2009, Proposition 2.6) corresponds to the result in Theorem 5.1 on global asymptotic stability in probability when the latter is specialized to nonlinear Markov jump systems and $\mathcal{A} := \{0\} \times Q$ where Q is a finite index set. However, Zhu et al. (2009, Proposition 2.6) considers only local asymptotic stability. Moreover, it again emphasizes that, when it is known a priori that spontaneous jumps from $\mathcal{A}$ do not exit $\mathcal{A}$, it is enough to check the condition (26b) outside of $\mathcal{A}$. The assumptions of Zhu et al. (2009, Proposition 2.6), which implicitly include continuity of the data, are strong enough to assert *uniform* local asymptotic stability, though this property is not considered in that work. Similar results for hybrid switching diffusions are found in Yin and Zhu (2010, Lemma 7.6 combined with Remark 7.8(a)) as well as Yin and Zhu (2010, Theorem 9.5) for (local, nonuniform) asymptotic stability in probability and Yin and Zhu (2010, Theorem 9.6) for (nonuniform) global asymptotic stability in probability for general compact sets. The result in Luo (2006, Theorem 3.9) is like the result in Theorem 5.1 on non-uniform asymptotic stability of a closed set, though Luo (2006, Theorem 3.9) is a local result and, due to its proof technique, it imposes an extra condition, akin to Jensen's inequality, on the function ρ in (26b).

The assertion of Liu and Mu (2008, Theorem 2) or Liu and Mu (2009, Corollary 4.1) resembles[4] the result in Theorem 5.1 on global asymptotic stability in probability when the latter is specialized to general stochastic hybrid systems of Section 3.4 and $\mathcal{A} := \{0\} \times Q$ where Q is a finite index set. The assumptions are strong enough for uniform global asymptotic stability, but only uniform Lyapunov stability and a weak form of nonuniform global attractivity are asserted. For this same set $\mathcal{A}$ and for a class of stochastic differential equations with state-dependent switching, Wu et al. (2013, Theorems 1 and 2) is like the result in Theorem 5.1 on global asymptotic stability in probability, with Wu et al. (2013, Theorem 2)[5] relying on a common Lyapunov function for each mode. The assumptions in Wu et al. (2013, Theorems 1 and 2) are strong enough to assert uniform global asymptotic stability in probability; however, the assertions are regarding uniform Lyapunov stability, uniform Lagrange stability, and non-uniform global attractivity.

Using (12), the assertion of Chatterjee and Liberzon (2007, Corollary 12 with Remark 9), which does not include uniform Lagrange stability, is covered by the result in Theorem 5.1 on uniform global asymptotic stability in the 1st mean when the latter is specialized to nonlinear Markov jump systems and $\mathcal{A} := \{0\} \times Q$ with Q finite.

The statement in Theorem 5.1 on uniform global asymptotic stability in probability is like Teel (2013, Theorem 4.5), which strengthens (26c) to account for the stronger definition of uniform attractivity that is used.

Finally, we remark that weak Lyapunov-based sufficient conditions for (non-uniform) global attractivity in the pth mean and in probability of the origin for diffusions driven by Lévy processes are given in Zhu (2014, Theorems 3.1, 3.2, 3.5–3.7).

6.5. Exponential stability

The result of Theorem 5.1 on global exponential stability in the pth mean, when specialized to hybrid switching diffusions and $\mathcal{A} := \{0\} \times Q$ where Q is a finite index set, covers Mao (1999, Theorem 3.1). When specialized to general stochastic hybrid systems of Section 3.4 and $\mathcal{A} := \{0\} \times Q$ where Q is a finite index set, it generalizes the assertion of Liu and Mu (2006, Theorem 3.1), which implicitly requires that $\Delta V(x) = 0$ for all $x \in D$. When

[3] Though it appears that these results are missing the assumption that the Lyapunov function is radially unbounded, i.e., $\alpha_1 \in \mathcal{K}_\infty$.

[4] It is not clear what assumption in these results rules out the positive probability of spontaneous jumps from $\mathcal{A}$ that leave $\mathcal{A}$. Also, the "finite contract" assumption in Liu and Mu (2008, Theorem 2) appears to be superfluous or incompatible with stability as stated in Liu and Mu (2008).

[5] Due to a typo, there are two theorems labeled "1" in Wu et al. (2013). We use "Theorem 2" to refer to the second "Theorem 1".

specialized to diffusions driven by Lévy processes and $\mathcal{A} := \{0\}$, it generalizes Applebaum and Siakalli (2009, Theorem 4.1). The result of Theorem 5.1 on global exponential stability in the 2nd mean recover the sufficient conditions in Antunes et al. (2010, Theorem 6) and Antunes et al. (2013a, Theorem 3) for the impulsive renewal processes considered there. Those systems include a continuous state plus a timer variable for each of the possible $m \geq 1$ reset maps for the continuous state, with each timer variable evolving at unity rate in a closed interval $\mathcal{I}_i \subset \mathbb{R}_{\geq 0}$ that includes the origin and has nonempty interior and with each timer randomly reset to zero according to its own hazard rate. The closed set that is globally exponentially stable in the 2nd mean is the set $\mathcal{A} := \{0\} \times (\mathcal{I}_1 \times \cdots \times \mathcal{I}_m)$.

6.5.1. Recurrence

Recurrence for an open bounded set for hybrid switching diffusions is considered in Yin and Zhu (2010, Chapter 3). The sufficiency condition for positive recurrence in Yin and Zhu (2010, Theorem 3.26) aligns with conditions for (uniform) positive recurrence in Theorem 5.2. The result in Yin and Zhu (2010, Theorem 3.14) on recurrence uses a relaxed condition that is discussed in Section 7.1 below. Results on the existence of stationary distributions, related to recurrence, for piecewise-deterministic Markov processes as discussed in Davis (1993, §34.3) are highlighted briefly in Section 7.3 below. The result in Teel (2013, Theorem 4.4) on uniform recurrence is similar to the result on uniform recurrence in Theorem 5.2 but strengthens the condition (26c) to account for the stronger definition of uniform recurrence that is used.

7. Relaxed sufficient conditions

7.1. Ideas based on Corollary 4.1 and Lemma 4.3

According to Corollary 4.1, once uniform Lyapunov stability in probability and uniform Lagrange stability in probability for a closed set $\mathcal{A}$ have been established, perhaps through the sufficient Lyapunov conditions of Theorem 5.1, uniform global asymptotic stability in probability for $\mathcal{A}$ can be inferred by establishing recurrence of the set $\mathcal{O}_{\varepsilon,\theta}$ in (25) for each pair (ε, θ) satisfying $0 < \varepsilon < \theta$. Lyapunov conditions for recurrence are given in Theorem 5.2, and they involve inequalities that must be satisfied on the complement of $\mathcal{O}_{\varepsilon,\theta}$. In the case where $\mathcal{A}$ is compact, the complement of $\mathcal{O}_{\varepsilon,\theta}$ is the compact set $\{x \in \mathbb{R}^n : |x|_{\mathcal{A}} \in [\varepsilon, \theta]\}$. The compactness of this set often facilitates constructing Lyapunov functions for recurrence. For example, the main idea behind "Matrosov functions" is that an appropriate positive linear combination of them produces a function that satisfies the conditions for positive recurrence of $\mathcal{O}_{\varepsilon,\theta}$. For a discussion of Matrosov functions for stochastic hybrid systems, see Teel (2013, Section 5.2); Matrosov functions for non-stochastic (hybrid) systems appear in Sanfelice and Teel (2009) and the references therein.

Lemma 4.3 provides a similar opportunity for establishing uniform recurrence of an open set $\mathcal{O}$. Indeed, once conditional uniform Lagrange stability in probability of $\overline{\mathcal{O}}$ relative to $\mathcal{O}$ has been established, perhaps through the sufficient Lyapunov conditions of Proposition 5.1, uniform recurrence can be inferred by establishing recurrence of the set $\mathcal{O}_\theta$ in (19) for each $\theta > 0$. When $\mathcal{O}$ is open and bounded, the complement of the set $\mathcal{O}_\theta$ in (19) is the compact set $\overline{\left\{x \in \mathbb{R}^n : |x|_{\overline{\mathcal{O}}} \in (0, \theta]\right\}}$. Again because of compactness, a positive linear combination of Matrosov functions can often be used to construct a function that satisfies the conditions for recurrence of $\mathcal{O}_\theta$.

A special case of Matrosov functions is when, for each θ, there is just one auxiliary (Matrosov) function used to establish recurrence of $\mathcal{O}_\theta$. One situation where this can be done for stochastic hybrid systems is under the following assumption, which applies to switching diffusions as indicated below and has its roots in Khasminskii (1960, Condition 3°, p. 179) and Wonham (1966, Condition (c), p. 196) for stochastic differential equations. In that setting, Wonham (1966, Condition (c), p. 196) aligns with condition 2b below and conveys being "in a local sense, 'controllable with respect to the white noise $\dot{w}$.' " Condition 2a below asks that the vector direction v associated with this local controllability is such that $v^T x$ does not change at jumps almost surely.

Assumption 7.1. The following conditions hold:

(1) The open set $\mathcal{O} \subset \mathbb{R}^n$ is bounded;
(2) there exists a vector $v \in \mathbb{R}^n$ such that
  (a) with the definition $\mathcal{E}(x) := \left\{\xi \in C : v^T\xi = v^T x\right\}$ for all $x \in C \cup D$, we have $R(x, \mathcal{E}(x)) = 1$ for all $x \in C \cup D$, and
  (b) for each $\theta > 0$ there exists $\kappa > 0$ such that $v^T h(x)h(x)^T v \geq \kappa$ for all $x \in C \cap (\mathbb{R}^n \backslash \mathcal{O}_\theta)$, where $\mathcal{O}_\theta$ is defined in (19). ■

The following proposition, together with Lemma 4.3, Proposition 5.1, and Theorem 5.2, recovers the conditions for recurrence for hybrid switching diffusions given in Yin and Zhu (2010, Theorem 3.14 (with the relaxation of (A3.1) given in Remark 3.3)); see also Khasminskii (2012, Lemma 3.9 and Remark 3.15).

Proposition 7.1. *If Assumption 7.1 holds then, for each $\theta > 0$, there exist positive real numbers c and β, and a positive integer p such that the function $V(x) := \max\left\{0, c - (v^T x + \beta)^{2p}\right\}$ satisfies the conditions given in Theorem 5.2 for uniform positive recurrence of the set $\mathcal{O}_\theta$.* ■

Proof. The proof follows Yin and Zhu (2010, Proof of Theorem 3.2) or Khasminskii (2012, p. 90) after observing that, due to the second item of Assumption 7.1 and the definition of V, we have $\int_C V(y)R(x, dy) = V(x)$ for all $x \in C \cup D$; thus, $\Delta V(x) = 0$ for all $x \in D \cap S$ and, for all $x \in C \cap S$, $\mathcal{L}V(x) = \langle \nabla V(x), f(x)\rangle + \frac{1}{2}\mathrm{tr}\left(h(x)h(x)^T \nabla^2 V(x)\right)$.

Define $S = S_\theta := \mathbb{R}^n \backslash \mathcal{O}_\theta = \overline{\left\{x \in \mathbb{R}^n : |x|_{\overline{\mathcal{O}}} \in (0, \theta]\right\}}$. Since $\mathcal{O}$ is bounded, S is compact for each $\theta > 0$. Let $M > 0$ be such that $\max\left\{|v^T x|, |v^T f(x)|\right\} \leq M$ for all $x \in S$. Define $\beta := M + 1$ so that $v^T x + \beta \in [1, M + \beta]$ for all $x \in S$. Define $p := \lceil 0.5 + (1 + M(M+\beta))/\kappa \rceil$ and $c := 1 + (M+\beta)^{2p}$, the latter guaranteeing that $V(x) = c - (v^T x + \beta)^{2p}$ on a neighborhood of S. Using condition 2(b) of Assumption 7.1,

$$\begin{aligned}\mathcal{L}V(x) &= -2p(v^T x + \beta)^{2(p-1)} \\ &\quad \cdot \left((v^T x + \beta)v^T f(x) + 0.5(2p-1)v^T h(x)h(x)^T v\right) \\ &\leq -2p(v^T x + \beta)^{2(p-1)}\left(-(M+\beta)M + 0.5(2p-1)\kappa\right) \\ &\leq -2p\end{aligned}$$

for all $x \in S \cap C$. This bound establishes the result. ■

7.2. Average dwell-time conditions for stability in the pth mean in impulsive stochastic systems with Markovian switching

For the systems of Section 3.1 or Section 3.2.4, instead of (26b)–(26c) consider the conditions

$$\mathcal{L}V(x) \leq \gamma_C(\tau, k)V(x) \quad \forall x = (z, q, \tau, k) \in C \tag{28a}$$

$$\Delta V(x) \leq \exp(\gamma_D(\tau, k))V(x) \quad \forall x = (z, q, \tau, k) \in D \tag{28b}$$

where $\gamma_C : \mathcal{T}_c \to \mathbb{R}$ is locally integrable in τ for each k and $\gamma_D : \mathcal{T}_d \to \mathbb{R}$. Rather than assuming that these functions have

nonpositive values, consider the function $\varepsilon : \mathcal{T}_c \cup \mathcal{T}_d \to \mathbb{R}$ defined via $\varepsilon(0, 0) := 1$,

$$\frac{d\varepsilon(\tau, k)}{d\tau} = -\gamma_C(\tau, k) \quad \forall \tau \in [t_k, t_{k+1}]$$
$$\varepsilon(\tau, k+1) - \varepsilon(\tau, k) = -\gamma_D(\tau, k) \quad \tau = t_{k+1}$$

and a bound of the form

$$\exp\left(\varepsilon(\tau, k) - \varepsilon(\tau + t, k + \ell)\right) \le \kappa(\exp(\gamma t))\beta_2(\tau, k)$$
$$\forall (\tau, k, t, \ell) \in \mathbb{R}^4_{\ge 0} : (\tau, k), (\tau + t, k + \ell) \in \mathcal{T}_c \tag{29}$$

where[6] $\kappa \in \mathcal{K}_\infty$, $\gamma \in \mathbb{R}$ and $\beta_2 \in \mathcal{L}^{\text{loc}}_\infty$. When γ_C and γ_D are constant, we have

$$\varepsilon(\tau, k) - \varepsilon(\tau + t, k + \ell) = \gamma_C t + \gamma_D N([\tau, \tau + t])$$

where $N([\tau, \tau + t])$ is the number of elements in $\mathcal{T} \cap [\tau, \tau + t]$. Thus, if there exist a positive number δ and a positive integer N_0 such that either of the following conditions hold:

$$\gamma_D \ge 0 \qquad N([\tau, \tau + t]) \le \delta t + N_0 \tag{30a}$$
$$\gamma_D \le 0 \qquad N([\tau, \tau + t]) \ge \delta t - N_0 \tag{30b}$$

then (29) holds with $\beta_2(\tau, k) \equiv 1$, $\kappa(s) := \exp(|\gamma_D| N_0) \cdot s$ and $\gamma = \gamma_C + \delta\gamma_D$. The condition (30a) is referred to in the literature as an average dwell-time condition (Hespanha & Morse, 1999) while (30b) is referred to as a reverse average dwell-time condition (Hespanha, Liberzon, & Teel, 2005).

Theorem 7.1 below addresses the results on (uniform and nonuniform) stability and asymptotic stability in the pth mean in Wu et al. (2004, Section 3) for the stochastic impulsive systems of Section 3.1 and in Wu and Sun (2006, Section 3) for the impulsive stochastic systems with Markovian switching described in Section 3.2.4.

Theorem 7.1. *Let Assumption 2.1 hold and let $\mathcal{A} \subset \mathbb{R}^n$ be closed. The uniform (respectively, non-uniform) version of a stability in the pth mean property for $\mathcal{A}$ listed in Table 2 holds if (26a) and (28)–(29) hold for some $V \in \mathcal{D}_{(\mathcal{H},S)}$ where (α_1, α_2) satisfy the requirements associated with that property in Table 2 with $\beta \equiv \beta_2 \equiv 1$ (respectively, $\beta, \beta_2 \in \mathcal{L}^{\text{loc}}_\infty$), $\kappa \in \mathcal{K}_\infty$ and $\gamma \le 0$, with $\gamma < 0$ for (uniform and non-uniform) global asymptotic stability in the pth mean and with $\kappa \in \mathcal{K}^1$ and $\gamma < 0$ for (uniform and non-uniform) global exponential stability in the pth mean.* ■

Proof. Define $W(x) := \exp(\varepsilon(\tau, k))V(x)$, where $x = (z, q, \tau, k)$, for which it can be verified that $\mathcal{L}W(x) \le 0$ for all $x \in C$ and $\Delta W(x) \le 0$ for all $x \in D$. It follows that, from the initial condition $\zeta = (z_\circ, q_\circ, \tau_\circ, k_\circ)$,

$$\begin{aligned}\mathbb{E}[V(\mathbf{x}(t))] &= \exp(-\varepsilon(\tau(t), k(t)))\mathbb{E}[W(\mathbf{x}(t))] \\ &\le \exp(-\varepsilon(\tau(t), k(t)))W(\zeta) \\ &= \exp\left(-\varepsilon(\tau + t, k(t)) + \varepsilon(\tau_\circ, k_\circ)\right) V(\zeta) \\ &\le \kappa(\exp(\gamma t))\beta_2(\tau_\circ, k_\circ)\alpha_2(|\zeta|_{\mathcal{A}})\beta(\zeta).\end{aligned}$$

The claims follow from the properties of α_2, β, β_2, κ, and γ. ■

The next corollary interprets results on uniform global asymptotic stability in the pth mean that appear in Chatterjee and Liberzon (2006b, Theorem 3.15 and Remark 3.18), a paper where a larger program of comparison principles and asymptotic stability with respect to two measures is pursued.

[6] The form of the bound in (29) is inspired by Sontag (1998, Lemma 8).

Corollary 7.1 (*Average and Reverse Average Dwell-Time Conditions*). *Let Assumption 2.1 hold and let $\mathcal{A} \subset \mathbb{R}^n$ be closed. The uniform (respectively, non-uniform) version of a stability in the pth mean property for $\mathcal{A}$ listed in Table 2 holds if (26a) and (28)–(29) hold, with γ_C and γ_D constant, for some $V \in \mathcal{D}_{(\mathcal{H},S)}$ where (α_1, α_2) satisfy the requirements associated with that property in Table 2 with $\beta \equiv \beta_2 \equiv 1$ (respectively, $\beta, \beta_2 \in \mathcal{L}^{\text{loc}}_\infty$), and either of the conditions in (30) hold with $\gamma_C + \delta\gamma_D \le 0$, with $\gamma_C + \delta\gamma_D < 0$ for (uniform and non-uniform) global asymptotic and global exponential stability in the pth mean.* ■

Though it has not been a primary topic of this survey, the conditions of the preceding corollary for global exponential stability in the pth mean can also be used to establish almost sure global exponential stability like in Xiang et al. (2011, Theorems 1–3).

7.3. "Multiple Lyapunov functions" or discrete-time models

Other results use Lyapunov functions but relax the monotonicity conditions (26b)–(26c) in ways that are more general than (28) but that require more knowledge about the behavior of the solutions to the system. This idea manifests itself in different forms, including studying the behavior of equivalent discrete-time models or in the notion of "multiple Lyapunov functions", which originally appeared in the non-stochastic switched systems literature (Branicky, 1998; DeCarlo et al., 2000); see also Michel et al. (2008). The condition of multiple Lyapunov functions has been extended to switched stochastic systems in Dimarogonas and Kyriakopoulos (2004, Theorem 3) to establish uniform Lagrange and Lyapunov stability in probability, in Chatterjee and Liberzon (2004, Theorem 3.2) to establish uniform global asymptotic stability in probability,[7] in Chatterjee and Liberzon (2006b, Corollary 3.11) to establish an asymptotic stability in expected value with respect to two measures, and in Filipovic (2009, Theorem 1) to establish exponential stability in the pth mean. See also Wu et al. (2013, §III.F).

In Costa (1990), Costa and Dufour (2008), Davis (1993, §34.3), and Dufour and Costa (1999) the ergodic properties of a piecewise-deterministic Markov process are analyzed by studying the behavior of a discrete-time Markov chain obtained by sampling the process at random times. In Costa (1990) and Davis (1993, §34.2–34.3), those times are the jump times of the process, while in Costa and Dufour (2008) and Dufour and Costa (1999) different random sampling times are used to relax assumptions that are required when the sample times are the jump times. In either case, a correspondence is established between the stationary distributions of the original process and of the discrete-time process (see Costa, 1990, Theorem 3, Costa & Dufour, 2008, Theorem 4.2, and Dufour & Costa, 1999, Theorem 3.5); in turn conditions like those in Meyn and Tweedie (1993) are used to established recurrence and ergodicity for the discrete-time process and thus for the original process as well. We refer the reader to Costa (1990, Propositions 6 and 7), Costa and Dufour (2008, Section 5), Davis (1993, Theorem 34.41), and Dufour and Costa (1999, Section 4) for example results.

A related stability criterion, for classes of hybrid systems that fit into the piecewise-deterministic Markov process framework, can be found in Abate, Shi, Simic, and Sastry (2004, Theorems 2.3, 2.4). The criterion involves a contraction condition on the products of the Lipschitz constants of the different flows and reset maps of the system; in the products, these constants are raised to powers that are associated with the steady-state distribution of the irreducible, positive recurrent, Markov chain that drives the system and is independent of the continuous-valued variables.

[7] The definition of uniform global asymptotic stability in probability used in Chatterjee and Liberzon (2004) is weaker than the definition considered here; for a more detailed comparison consider Kozin (1969, Example 2.1) and see Chatterjee and Liberzon (2006b, Appendices A and B).

7.4. Results based on the invariance principle

For the case of compact attractors, yet another relaxation of standard Lyapunov conditions involves invoking the invariance principle (Krasovskii, 1963, Theorem 14.1, LaSalle, 1960, 1967). For non-stochastic hybrid systems satisfying mild regularity conditions, when a Lyapunov function can be found that establishes Lyapunov and Lagrange stability, global asymptotic stability ensues when there are no complete solutions that remain forever in a non-zero level set of the Lyapunov function; see Goebel et al. (2009, Theorem 23) or Goebel et al. (2012, Chapter 8). The first extensions of the invariance principle to non-stochastic hybrid systems appeared in Chellaboina, Bhat, and Haddad (2003) and Lygeros, Johansson, Simić, Zhang, and Sastry (2003) but required uniqueness of solutions and a non-generic quasi-continuous dependence of solutions on initial conditions. A more flexible version appeared in Sanfelice, Goebel, and Teel (2007).

With the exception of Teel (2014b), so far the invariance principle for SHS has required unique solutions that are continuous in probability and Feller and, to the best of the authors' knowledge, has been developed only for hybrid switching diffusions that satisfy these conditions. The results in Yin and Zhu (2010, §9.4, especially Remark 9.20), which are inspired by Kushner (1968), fall into this category. The inherent difficulties associated with establishing the Feller property for more general SHS have impeded the development of more general results.

A few Lyapunov-based results that address partial convergence have appeared in the SHS literature, such as Liu and Mu (2009, Theorem 4.1)[8] and Yin and Zhu (2010, Theorem 9.7(iii)).

The state-of-the-art in this area leads to the question:

Open Problem 3. *Under which (mild) conditions on the data of $\mathcal{H}$ does a stochastic invariance principle apply to SHS?* ■

8. Additional components of stability theory

8.1. Robustness and its corollaries

One other prominent feature of stability theory for non-stochastic hybrid systems involves robustness of asymptotic stability for compact sets Goebel et al. (2012, Theorem 7.21) and a myriad of ensuing corollaries such as converse Lyapunov theorems Goebel et al. (2012, Corollary 7.32), a reduction principle Goebel et al. (2012, Corollary 7.24) and robustness to slowly-varying parameters Goebel et al. (2012, Corollary 7.27), slow average-dwell time switching Goebel et al. (2012, Corollary 7.28), singular perturbations (Sanfelice & Teel, 2011), and high-frequency disturbances (Wang, Teel, & Nesic, 2012), to name a few phenomena. With the notable exception of converse Lyapunov theorems, mainly for hybrid switching diffusions and nonlinear jump Markov systems, very few of these robustness corollaries have appeared in the SHS literature. However, rather than casting these corollaries as open problems, we instead focus on more fundamental results related to robustness and converse Lyapunov theorems.

8.2. Converse Lyapunov theorems

8.2.1. Overview

The viewpoint that converse Lyapunov theorems are corollaries of robustness, rather than the other way around, is a recent one, with the possible exception of Kurzweil (1963). The newer viewpoint is prominent in Clarke, Ledyaev, and Stern (1998) and Teel and Praly (2000) for differential inclusions, in Kellett and Teel (2004) for difference inclusions, and in Cai, Teel, and Goebel (2007) and Cai, Teel, and Goebel (2008) for non-stochastic hybrid systems. The older viewpoint stems from the fact that, for systems with continuous dependence on initial conditions, sufficiently smooth Lyapunov functions usually can be constructed without appealing to robustness. In contrast, for systems exhibiting weaker continuity with respect to initial conditions, robustness is usually established first and then used to build smooth Lyapunov functions. It is the older viewpoint that currently pervades the SHS literature, where converse Lyapunov theorems have been established mainly for SHS that satisfy continuity properties like the Feller property Fristedt and Gray (1997, Def. 10, p. 627), in particular, for hybrid switching diffusions and nonlinear jump Markov systems. In the next section, we recall converse Lyapunov theorems that exist in the SHS literature.

8.2.2. Exponential stability in the pth mean

For hybrid switching diffusions with a constant jump-rate function and with drift and diffusion terms that have continuous and bounded derivatives up to second order, Yuan and Lygeros (2005b, Theorem 2.2) reports that exponential stability in the 2nd mean of the set $\mathcal{A} = \{0\} \times Q$, with Q finite, implies the existence of a twice continuously differentiable Lyapunov function satisfying (26a)–(26b) with $\alpha_1, \alpha_2 \in \mathcal{K}^2$, $\rho \propto V$ and with a bounded Hessian and a linearly bounded gradient. This result is extended to systems with bounded, continuous jump-rate functions and exponential stability in the pth mean in Khasminskii et al. (2007, Theorem 3.8); see also Yin and Zhu (2010, Theorem 7.12). A converse theorem for exponential stability in the 2nd mean for $\mathcal{A} := \{0\} \times (\mathcal{I}_1 \times \cdots \times \mathcal{I}_m)$ (see the end of Section 6.5 above) for impulsive systems driven by renewal processes is given in Antunes et al. (2010, Theorem 6) and Antunes et al. (2013a, Theorem 3) under the assumption that the drift and reset mappings are differentiable and globally Lipschitz; no bound on the gradient of the Lyapunov function is asserted.

The statement of Liu and Mu (2006, Theorem 3.2) attempts to extend Khasminskii et al. (2007, Theorem 3.8) to general stochastic hybrid systems. However, without additional assumptions, exponential stability in the pth mean does not imply the existence of a twice continuously differentiable Lyapunov function for general stochastic hybrid systems, or piecewise-deterministic Markov processes, as the following examples illustrate. The first example is inspired by Kellett and Teel (2004, "An example", p. 396).

Example 8.1 (*No Robustness and No Continuous Lyapunov Function for a Pure-Jump Continuous-Time Markov Process: a Discontinuous Transition Function*)**.** Consider a SHS with $x \in \mathbb{R}$, drift term $f(x) \equiv 0$, diffusion term $h(x) \equiv 0$, jump-rate function $\lambda(x) \equiv 1$, flow set $C = \mathbb{R}$, jump set $D = \varnothing$, and transition function R satisfying $R(x, \{g(x)\}) = 1$ for all $x \in \mathbb{R}$ where, as illustrated in Fig. 6, $g(x) = 0$ for all $x \leq 0$ and $g(x) = (1/2)^{i(x)}$ for $x > 0$ where $i : \mathbb{R}_{>0} \to \mathbb{Z}$ is given as $i(x) := i$ for all $x \in ((1/2)^i, (1/2)^{i-1}]$. Thus $|g(x)| \leq |x|$ for all $x \in \mathbb{R}$; hence $\mathbb{P}(\sup_{t\geq 0} |\mathbf{x}(t)| \leq |\zeta|) = 1$ for all $\zeta \in \mathbb{R}$ and uniform Lagrange stability and uniform Lyapunov stability of the origin ensue. Next, with $S := \cup_{i\in\mathbb{Z}}(1/2)^i$, it follows that $g(x) = 0.5x$ for all $x \in S$ and that the solution enters and remains in S after one jump. Hence, after $m \in \mathbb{Z}_{\geq 0}$ jumps from the initial condition ζ, the magnitude of the solution is bounded by $(1/2)^{m-1}|\zeta|$. The number of jumps in the interval $[0, t]$, denoted $\mathbf{m}(t)$, has the Poisson distribution $\mathbb{P}(\mathbf{m}(t) = k) = e^{-t}t^k/k!$ (see Davis, 1993, §21.4). It follows that $\mathbb{E}[|\mathbf{x}(t)|^p] \leq 2e^{-t/2}|\zeta|^p$ for all $p \geq 1$, $t \geq 0$ and $\zeta \in \mathbb{R}$, and, for $T \geq 1$, $\mathbb{P}\left(\sup_{t\geq T} |\mathbf{x}(t)| \leq (1/2)^{k-1}|\zeta|\right) \geq \mathbb{P}(\mathbf{m}(t) \geq k) \geq 1 - \sum_{i=0}^{k-1} e^{-T}T^i/i! \geq 1 - ke^{-T}T^k$. Thus the origin

[8] Allowing that Liu and Mu (2009, (12)) contains a typo: "<" should be replaced by "≤".

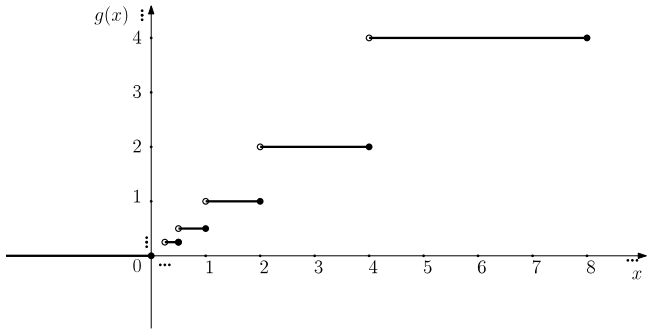

Fig. 6. The function g in Example 8.1.

is globally exponentially stable in the pth mean and uniformly globally asymptotically stable in probability.

Suppose there exist a continuous function $V : \mathbb{R} \to \mathbb{R}_{\geq 0}$ and $c > 0$ such that $\int_{\mathbb{R}} V(y)R(x, dy) - V(x) \leq -c$ for all $x \in [1, 2]$. Consider a sequence $x_i \in (1, 2]$ with $\lim_{i\to\infty} x_i = 1$ and note that $\lim_{i\to\infty} g(x_i) = 1$ (though $g(1) = 1/2$). Then

$$\begin{aligned} -c &\geq \lim_{i\to\infty} \left(\int_{\mathbb{R}} V(y)R(x_i, dy) - V(x_i) \right) \\ &= \lim_{i\to\infty} (V(g(x_i)) - V(x_i)) \end{aligned}$$

which is impossible since the continuity of V makes the last limit equal to zero. ■

The next example is inspired by Cai, Teel et al. (2008, Example 6.1).

Example 8.2 (*No Robustness and No Continuously Differentiable Lyapunov Function for a General SHS or Piecewise-Deterministic Markov Process with Smooth Data*)**.** Let two positive real numbers $c_1 < c_2$ be given. Consider a SHS with $x \in \mathbb{R}^2$, a diffusion term $h(x) \equiv 0$ and a jump-rate function $\lambda(x) \equiv 0$. The drift term is $f(x) := (x_2, -x_1)^T - \eta(x)x$ where $\eta : \mathbb{R}^2 \to \mathbb{R}_{\geq 0}$ is a smooth function such that $\eta(x) = 0$ for $\sqrt{x^T x} \geq 2c_1$ and $\eta(x) = 1$ for $\sqrt{x^T x} \leq c_1$. As illustrated in Fig. 7, define $E^\circ := E_0^\circ \cup E_1^\circ$ where $E_0^\circ := c_1\mathbb{B}^\circ$ and $E_1^\circ := \left\{x \in \mathbb{R}^2 : \sqrt{x^T x} \in (2c_1, 2c_2)\right\} \setminus \overline{E_2^\circ}$. where $E_2^\circ := \{(\pm(c_1 + c_2), 0)\} + (c_2 - c_1)\mathbb{B}^\circ$. For the general stochastic hybrid systems framework, take $C := E^\circ$ and $D = \partial E^\circ$. For the piecewise-deterministic Markov process framework, C is the union of E° and three pieces of the boundary of E°: (1) the boundary of E_0°, (2) the small semi-circle, excluding the endpoints, on the bottom half of the circle of radius $c_2 - c_1$ centered at $(c_1 + c_2, 0)$, (3) the small semi-circle, excluding the endpoints, on the top half of the circle of radius $c_2 - c_1$ centered at $(-c_1 - c_2, 0)$; D is the union of two pieces of the boundary of E°: (1) the small semi-circle, excluding the endpoints, on the top half of the circle of radius $c_2 - c_1$ centered at $(c_1 + c_2, 0)$, (3) the small semi-circle, excluding the endpoints, on the bottom half of the circle of radius $c_2 - c_1$ centered at $(-c_1 - c_2, 0)$. In either case, the transition function satisfies $R(x, \{0\}) = 1$ for all $x \in D$.

Note the this system actually has no stochastic component and each solution has just one jump; that jump is to the origin and occurs within the first 2π seconds. The solutions satisfy $|x(t)| \leq \exp(2\pi)\exp(-t)|\zeta|$ for all $x \in \mathcal{S}(\zeta)$ and $t \geq 0$. Thus the origin is globally exponentially stable (in the pth mean) and uniformly globally asymptotically stable (in probability). Suppose there exists a continuously differentiable function V such that $\langle \nabla V(x), f(x)\rangle < 0$ for all $x \in E_1^\circ$. By continuity of f and ∇V and the definition of E_1°, this implies that there exists $c > 0$ such that $\langle \nabla V(x), f(x)\rangle \leq -c$ for all x in the circle of radius $2c_1$ as well as in the circle of radius $2c_2$. But since these circles are invariant under the flow $\dot{x} = f(x)$, this is a contradiction. ■

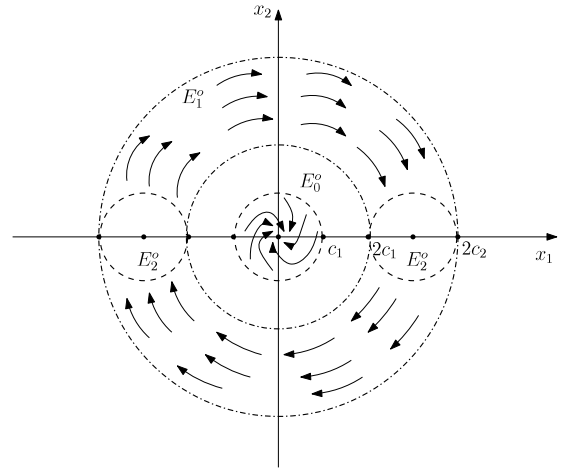

Fig. 7. Data and behavior of solutions for Example 8.2.

8.3. Asymptotic stability and recurrence

To the best of the authors' knowledge, the only converse Lyapunov theorem for asymptotic stability in probability or recurrence for SHS in the literature is the converse theorem on positive recurrence for hybrid switching diffusions contained in Yin and Zhu (2010, Theorem 3.25); that theorem states that positive recurrence implies the existence of a twice continuously differentiable function $V \in \mathcal{D}_{(\mathcal{H},S)}$ satisfying (26a)–(26b), with equality in (26b) in fact, with $(\alpha_1, \alpha_2, \rho)$ satisfying the conditions for positive recurrence in Table 3. We have not seen Kushner (2014, Theorem 7.8) extended to SHS.

8.4. State-of-the-art

To the best of our knowledge, no (correct) converse Lyapunov theorems exist for SHS where the jump set D is nonempty. For non-stochastic hybrid systems, that asymptotic stability of a compact set implies the existence of a smooth Lyapunov function has been established only recently Cai, Teel et al. (2008); a key idea in the construction is robustness Cai et al. (2007). Thus, it seems logical that a similar approach will be needed for developments for SHS as well; robustness is discussed in more detail in the next section. There is much work to be done on converse Lyapunov theorems for SHS, as summarized in the following question.

Open Problem 4. *Under which (mild) conditions on the data of $\mathcal{H}$ is does uniform global asymptotic stability (either in probability or in the pth mean) of a compact set, or uniform recurrence or positive recurrence of an open bounded set, guarantee the existence of a smooth Lyapunov function?* ■

8.5. A formulation of the robustness problem

The problem of robustness, *without assuming the existence of a Lyapunov function for the nominal system*, has not been discussed in the SHS literature to the best of the authors' knowledge. We now formulate a version of this problem using a robustness characterization motivated by one that has proved to be very useful for non-stochastic hybrid system Goebel et al. (2012, §7.3, 7.4). Given a SHS with data $\mathcal{H} := (C, (f, h), (\lambda, R_C), D, R_D)$ and a continuous function $\rho : C \cup D \to \mathbb{R}_{\geq 0}$, we characterize ρ-inflated data as follows: let $a(x) := h(x)h(x)^T$ for all $x \in C$, suppose the functions $g_C : C \times \mathbb{R}^m \to C$ and $g_D : D \times \mathbb{R}^m \to C$ are measurable in their second argument and the distribution function $\mu : \mathfrak{B}(\mathbb{R}^m) \to [0, 1]$ is such that (see Davis, 1993, Corollary 23.4)

$$R_C(x, A) = \mu\left(\left\{v \in \mathbb{R}^m : g_C(x, v) \in A\right\}\right) \quad \forall (x, A) \in C \times \mathfrak{B}(C)$$
$$R_D(x, A) = \mu\left(\left\{v \in \mathbb{R}^m : g_D(x, v) \in A\right\}\right) \quad \forall (x, A) \in D \times \mathfrak{B}(C);$$

inspired by Cai, Teel et al. (2008, (22)–(25)) define

$$C_\rho := \left\{x \in \mathbb{R}^n : (x + \rho(x)\mathbb{B}) \cap C \neq \varnothing\right\} \tag{31a}$$
$$F_\rho(x) := \overline{\text{co}} f((x + \rho(x)\mathbb{B}) \cap C) + \rho(x)\mathbb{B} \tag{31b}$$
$$A_\rho(x) := \overline{\text{co}}\, a((x + \rho(x)\mathbb{B}) \cap C) + \rho(x)\mathbb{B}, \tag{31c}$$
$$\Lambda_\rho(x) := \lambda((x + \rho(x)\mathbb{B}) \cap C) + \rho(x)\mathbb{B} \tag{31d}$$
$$D_\rho := \left\{x \in \mathbb{R}^n : (x + \rho(x)\mathbb{B}) \cap D \neq \varnothing\right\}, \tag{31e}$$

where $\overline{\text{co}}(S)$ denotes the closed convex hull of S, and

$$G_{C,\rho}(x, \nu) := \{u \in C : u = w + \rho(w)\mathbb{B}, \; w \in g_C((x + \rho(x)\mathbb{B}) \cap C, \nu)\} \tag{32a}$$
$$G_{D,\rho}(x, \nu) := \{u \in C : u = w + \rho(w)\mathbb{B}, \; w \in g_D((x + \rho(x)\mathbb{B}) \cap D, \nu)\}, \tag{32b}$$

and consider ρ-inflated data to be any data $\widetilde{\mathcal{H}} = (\widetilde{C}, \widetilde{f}, \widetilde{h}, \widetilde{\lambda}, \widetilde{R}_C, \widetilde{D}, \widetilde{R}_D)$ for which Assumption 2.1 is satisfied and

$$\widetilde{C} \subset C_\rho \tag{33a}$$
$$\widetilde{f}(x) \in F_\rho(x) \quad \forall x \in C \tag{33b}$$
$$\widetilde{h}(x)\widetilde{h}(x)^T \in A_\rho(x) \quad \forall x \in C \tag{33c}$$
$$\widetilde{\lambda}(x) \in \Lambda_\rho(x) \quad \forall x \in C \tag{33d}$$
$$\widetilde{D} \subset D_\rho \tag{33e}$$
$$\widetilde{g}_C(x, v) \in G_{C,\rho}(x, v) \quad \forall (x, v) \in C \times \mathbb{R}^m \tag{33f}$$
$$\widetilde{g}_D(x, v) \in G_{D,\rho}(x, v) \quad \forall (x, v) \in D \times \mathbb{R}^m \tag{33g}$$

and

$$\widetilde{R}_C(x, A) = \mu\left(\left\{v \in \mathbb{R}^m : \widetilde{g}_C(x, v) \in A\right\}\right) \quad \forall (x, A) \in C \times \mathfrak{B}(C) \tag{34a}$$
$$\widetilde{R}_D(x, A) = \mu\left(\left\{v \in \mathbb{R}^m : \widetilde{g}_D(x, v) \in A\right\}\right) \quad \forall (x, A) \in C \times \mathfrak{B}(C). \tag{34b}$$

As ρ decreases in size, the inflations (31)–(32) of the original data converge to the original data in a graphical sense Rockafellar and Wets (1998, §5.E); thus the constraints (33)–(34) force the new data to approach the original data in this sense.

Open Problem 5. *Under which (mild) conditions on the data of $\mathcal{H}$ does*

- *uniform global asymptotic stability of a compact set $\mathcal{A}$ imply the existence of a continuous function $\rho : \mathbb{R}^n \to \mathbb{R}_{\geq 0}$ that is positive definite with respect to $\mathcal{A}$ such that $\mathcal{A}$ is uniform globally asymptotically stable for each system $\widetilde{\mathcal{H}}$ with ρ-inflated data;*
- *uniform recurrence (respectively, positive recurrence) of an open bounded set $\mathcal{O}$ imply the existence of a continuous function $\rho : \mathbb{R}^n \to \mathbb{R}_{\geq 0}$ that is positive on $\mathbb{R}^n \backslash \mathcal{O}$ such that $\mathcal{O}$ is uniformly recurrent (respectively, positive recurrent) for each system $\widetilde{\mathcal{H}}$ with ρ-inflated data.* ■

Three observations make these problems reasonable.

(1) The problems have a reasonable answer for non-stochastic hybrid systems, which is that the data should satisfy the hybrid basic conditions of Goebel et al. (2009, (A1)–(A3), p. 43), Goebel and Teel (2006, (A0)–(A4), pp. 575, 580), or Goebel et al. (2012, Assumption 6.5); see Goebel et al. (2012, Theorem 7.21). It has a similar answer for stochastic difference inclusions Subbaraman and Teel (2013), Teel, Hespanha, and Subbaraman (2014).

(2) At least for the stochastic hybrid inclusions of (16) with data (C, F, D, G) satisfying the stochastic hybrid basic conditions of Teel (2013, Assumptions 1–2, p. 5), if there exists a continuous differentiable Lyapunov function V that establishes asymptotic stability of a compact set $\mathcal{A}$ or recurrence of an open, bounded set $\mathcal{O}$ for (C, F, D, G) then there exists a perturbation function ρ of the type considered in the open problems for which V, or $\kappa(V)$ with κ an appropriate concave function in class-$\mathcal{K}_\infty$, remains a Lyapunov function that establishes asymptotic stability of $\mathcal{A}$ or recurrence of $\mathcal{O}$ for $(C_\rho, F_\rho, D_\rho, G_\rho)$, where this inflated data is defined as above; see Teel (2013, Theorem 4.6).

(3) The robustness requested in Open Problem 5 is closely connected to the type that guarantees the existence of a smooth Lyapunov function for asymptotic stability in probability or for recurrence for stochastic difference inclusions; see Subbaraman and Teel (2013) and Teel et al. (2014).

On the other hand, neither the global exponential stability in the pth mean nor the uniform global asymptotic stability in probability of the origin in Examples 8.1 and 8.2 is robust in the sense requested in Open Problem 5.

For Example 8.1, this can be seen by keeping the data the same except for the transition function R which is changed by changing the mapping g. For each continuous, positive definite function ρ, the mapping $\widetilde{g}_C$ where $\widetilde{g}_C(x) = 0$ for all $x \leq 0$ and $\widetilde{g}_C(x) = (1/2)^{\widetilde{i}(x)}$ where $\widetilde{i}(x) := i$ for all $x \in [(1/2)^i, (1/2)^{i-1})$ satisfies $\widetilde{g}_C(x) \in G_{C,\rho}(x)$ for all $x \in \mathbb{R}$; yet $\widetilde{g}_C((1/2)^i) = (1/2)^i$ for all $i \in \mathbb{Z}$, which precludes global exponential stability in the pth mean and uniform global asymptotic stability in probability for the modified system.

For Example 8.2, this can be seen by keeping the data the same except for the sets C and D which are changed by changing the set E_2°. For each continuous, positive definite function ρ, there exists $\varepsilon > 0$ such that with E°, and subsequently $\widetilde{C}$ and $\widetilde{D}$, defined in terms of $E_{2,\varepsilon}^\circ := \{(\pm(c_1 + c_2), 0)\} + (c_2 - c_1 - \varepsilon)\mathbb{B}^\circ$ instead of E_2°, we have $\widetilde{C} \subset C_\rho$ and $\widetilde{D} \subset D_\rho$; yet $\widetilde{C}$ must include the circles with radius in the set $(2c_1, 2c_1 + \varepsilon) \cup (2c_2 - \varepsilon, 2c_2)$ and these circles are forward invariant under the flow map, which precludes global exponential stability in the pth mean and uniform global asymptotic stability in probability for the modified system.

See Fig. 8 for a summary of results on stability, including uniformity and robustness; see Fig. 9 for a summary regarding recurrence.

8.6. Sequential compactness

The key to nominal robustness, and converse Lyapunov theorems, for non-stochastic systems is a sequential compactness property for solutions Goebel et al. (2012, Theorem 6.30) that, in the case of unique solutions, involves some type of quasi-continuous dependence on initial conditions. Hence, it is not surprising that known results related to robustness for SHS, which are mainly converse Lyapunov theorems, pertain to systems without forced jumps, like in hybrid switching diffusions and nonlinear jump Markov systems, where it is easiest to establish continuity properties like the Feller property. No other subclasses have been identified for which a Feller-like property holds, though there may be opportunities to exploit transversality conditions like those in Broucke and Arapostathis (2002) for non-stochastic hybrid systems; see also Cai, Goebel, and Teel (2008). Moreover, in the absence of Feller-like properties, no generalized solution concepts have been pursued for the purposes of obtaining useful sequential compactness properties; see Sanfelice, Goebel, and Teel (2008) for generalized solutions to non-stochastic hybrid systems. These observations leads to perhaps the most fundamental open questions related to SHS, which we formulate to conclude this survey.

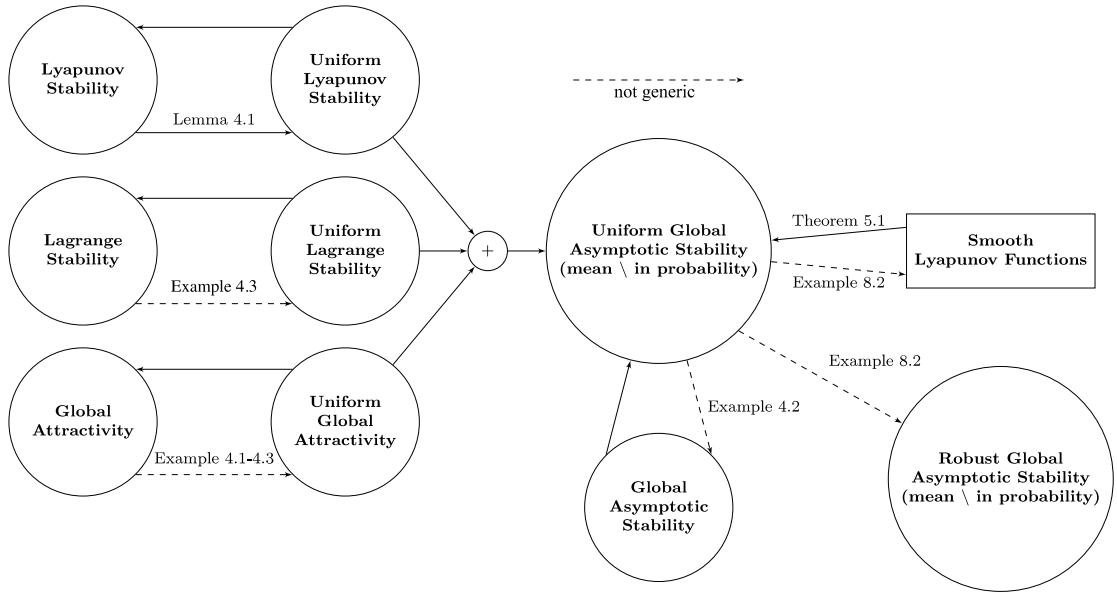

Fig. 8. Summary of stability results.

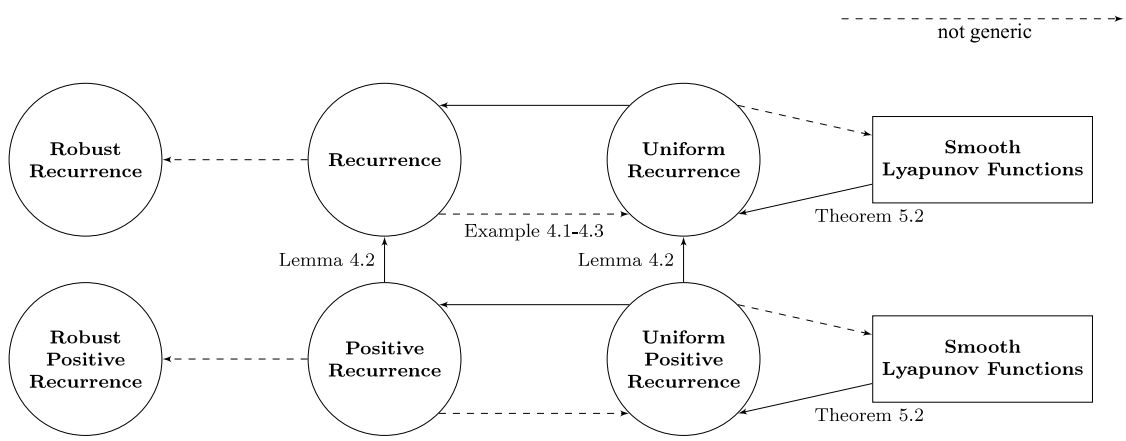

Fig. 9. Summary of recurrence results.

Open Problem 6. *For the SHS of Section 2.2, under which (mild) assumptions can Feller-like continuity properties be established and exploited to generate robustness results? When such properties fail, is there a reasonable notion of a generalized solution that leads to useful sequential compactness properties?* ■

Sequential compactness properties for solutions of (16) have been pursued in Teel (2014c).

9. Conclusion

Stochastic hybrid systems (SHS) cover a wide range of models that have appeared in the literature. They address situations where the continuous evolution is stochastic, via a stochastic differential equation, and for which random jumps in the state vector may occur spontaneously and also due to the state reaching a boundary in the state space. This modeling class is very rich and covers many interesting applications. While basic sufficient conditions for stability, usually expressed in terms of Lyapunov functions, are well understood, other questions pertaining to stability theory for these systems remain unanswered. Some of these questions include asking when a non-uniform stability property implies the corresponding uniform stability property, when a general invariance principle can be applied to establish asymptotic stability, when asymptotic stability or recurrence imply the existence of a smooth Lyapunov function, when asymptotic stability or recurrence imply that this property holds robustly, and what sequential compactness results are reasonable in order to establish robustness for general SHS. Many of the above questions are relatively easy to answer with continuity properties like the Feller property, but the latter is not generic for SHS. There are many cues to be taken from recent results in the non-stochastic hybrid systems literature. With those results serving as inspiration, we anticipate that many of the open questions posed here will be resolved within the next five years. We also speculate, based on avenues of progress for non-stochastic hybrid systems, that a very productive path toward this end will involve pursuing the research questions posed by the class of stochastic hybrid inclusions in (16) and its generalizations.

Acknowledgment

The authors thank João Hespanha for many enlightening discussions regarding stochastic hybrid systems.

References

Abate, A., Shi, L., Simic, S., & Sastry, S. (2004). A stability criterion for stochastic hybrid systems. In *16th international symposium on mathematical theory of networks and systems. Leuven, Belgium*.

Aberkane, S. (2011). Stochastic stabilization of a class of nonhomogeneous Markovian jump linear systems. *Systems & Control Letters*, *60*(3), 156–160.

Antunes, D., Hespanha, J. P., & Silvestre, C. (2010). Impulsive systems triggered by superposed renewal processes. In *Proceedings of the 49th IEEE conference on decision and control* (pp. 1779–1784).

Antunes, D. J., Hespanha, J. P., & Silvestre, C. J. (2012). Volterra integral approach to impulsive renewal systems: application to networked control. *IEEE Transactions on Automatic Control*, *57*(3), 607–619.

Antunes, D., Hespanha, J. P., & Silvestre, C. (2013a). Stability of networked control systems with asynchronous renewal links: An impulsive systems approach. *Automatica*, *49*(2), 402–413.

Antunes, D. J., Hespanha, J. P., & Silvestre, C. J. (2013b). Stochastic hybrid systems with renewal transitions: moment analysis with application to networked control systems with delays. *SIAM Journal on Control and Optimization*, *51*(2), 1481–1499.

Applebaum, D. (2009). *Lévy processes and stochastic calculus* (2nd ed.). Cambridge University Press.

Applebaum, D., & Siakalli, M. (2009). Asymptotic stability of stochastic differential equations driven by Lévy noise. *Journal of Applied Probability*, *46*(4), 1116–1129.

Aubin, J.-P., Da Prato, G., & Frankowska, H. (2000). Stochastic invariance for differential inclusions. *Set-Valued Analysis*, *8*(1–2), 181–201.

Basak, G. K., Bisi, A., & Ghosh, M. K. (1996). Stability of a random diffusion with linear drift. *Journal of Mathematical Analysis and Applications*, *202*(2), 604–622.

Bass, R. (2004). Stochastic differential equations with jumps. *Probability Surveys*, *1*, 1–19.

Batt, G., Ropers, D., De Jong, H., Geiselmann, J., Page, M., & Schneider, D. (2005). Qualitative analysis and verification of hybrid models of genetic regulatory networks: nutritional stress response in escherichia coli. In *Hybrid systems: computation and control* (pp. 134–150). Springer.

Bellman, R. (1954). Limit theorems for non-commutative operations. I. *Duke Mathematical Journal*, *21*(3), 491–500.

Benjelloun, K., & Boukas, E.-K. (1998). Mean square stochastic stability of linear time-delay system with Markovian jumping parameters. *IEEE Transactions on Automatic Control*, *43*(10), 1456–1460.

Bergen, A. (1960). Stability of systems with randomly time-varying parameters. *IRE Transactions on Automatic Control*, *5*(4), 265–269.

Bertram, J., & Sarachik, P. (1959). Stability of circuits with randomly time-varying parameters. *IRE Transactions on Information Theory*, *5*(5), 260–270.

Bohacek, S., Hespanha, J. P., Lee, J., & Obraczka, K. (2003). A hybrid systems modeling framework for fast and accurate simulation of data communication networks. In *ACM SIGMETRICS performance evaluation review. Vol. 31* (pp. 58–69). ACM.

Bolzern, P., Colaneri, P., & De Nicolao, G. (2010). Markov jump linear systems with switching transition rates: mean square stability with dwell-time. *Automatica*, *46*(6), 1081–1088.

Boukas, E.-K. (2006a). Stabilization of stochastic singular nonlinear hybrid systems. *Nonlinear Analysis. Theory, Methods & Applications*, *64*(2), 217–228.

Boukas, E.-K. (2006b). *Stochastic switching systems: analysis and design*. Springer.

Boukas, E.-K., & Shi, P. (1998). Stochastic stability and guaranteed cost control of discrete-time uncertain systems with Markovian jumping parameters. *International Journal of Robust and Nonlinear Control*, *8*(13), 1155–1167.

Branicky, M. S. (1998). Multiple Lyapunov functions and other analysis tools for switched and hybrid systems. *IEEE Transactions on Automatic Control*, *43*, 1679–1684.

Broucke, M., & Arapostathis, A. (2002). Continuous selections of trajectories of hybrid systems. *Systems & Control Letters*, *47*(2), 149–157.

Bujorianu, M. L. (2004). Extended stochastic hybrid systems and their reachability problem. In R. Alur, & G. J. Pappas (Eds.), *Hybrid systems: computation and control* (pp. 234–249). Springer.

Bujorianu, L. M. (2012). *Stochastic reachability analysis of hybrid systems*. Springer.

Bujorianu, M., & Bujorianu, M. (2012). Contingent hybrid systems. In *Proceedings of the 4th IFAC conference on design and analysis of hybrid systems* (pp. 442–447).

Bujorianu, M. L., & Lygeros, J. (2006). Toward a general theory of stochastic hybrid systems. In H. A. P. Blom, & J. Lygeros (Eds.), *Stochastic hybrid systems* (pp. 3–30). Springer.

Cai, C., Goebel, R., & Teel, A. R. (2008). Relaxation results for hybrid inclusions. *Set-Valued Analysis*, *16*(5–6), 733–757.

Cai, C., Teel, A. R., & Goebel, R. (2007). Smooth Lyapunov functions for hybrid systems—part I: existence is equivalent to robustness. *IEEE Transactions on Automatic Control*, *52*(7), 1264–1277.

Cai, C., Teel, A. R., & Goebel, R. (2008). Smooth Lyapunov functions for hybrid systems. Part II: (Pre-)asymptotically stable compact sets. *IEEE Transactions on Automatic Control*, *53*(3), 734–748.

Cao, Y.-Y., Lam, J., & Hu, L. (2003). Delay-dependent stochastic stability and $\mathcal{H}_\infty$ analysis for time-delay systems with Markovian jumping parameters. *Journal of the Franklin Institute*, *340*(6), 423–434.

Cassandras, C. G., & Lygeros, J. (Eds.) (2010). *Stochastic hybrid systems*. CRC Press.

Chatterjee, D., & Liberzon, D. (2004). On stability of stochastic switched systems. In *Proceedings of the 43rd IEEE conference on decision and control. Vol. 4* (pp. 4125–4127).

Chatterjee, D., & Liberzon, D. (2006a). Stability analysis and stabilization of randomly switched systems. In *Proceedings of the 45th IEEE conference on decision and control* (pp. 2643–2648).

Chatterjee, D., & Liberzon, D. (2006b). Stability analysis of deterministic and stochastic switched systems via a comparison principle and multiple Lyapunov functions. *SIAM Journal on Control and Optimization*, *45*(1), 174–206.

Chatterjee, D., & Liberzon, D. (2007). On stability of randomly switched nonlinear systems. *IEEE Transactions on Automatic Control*, *52*(12), 2390–2394.

Chellaboina, V., Bhat, S., & Haddad, W. (2003). An invariance principle for nonlinear hybrid and impulsive dynamical systems. *Nonlinear Analysis*, *53*, 527–550.

Clarke, F., Ledyaev, Y., & Stern, R. (1998). Asymptotic stability and smooth Lyapunov functions. *Journal of Differential Equations*, *149*, 69–114.

Costa, O. (1990). Stationary distributions for piecewise-deterministic Markov processes. *Journal of Applied Probability*, 60–73.

Costa, O. L. V., & Dufour, F. (2008). Stability and ergodicity of piecewise-deterministic Markov processes. *SIAM Journal on Control and Optimization*, *47*(2), 1053–1077.

David, D., Okur, Y. Y., et al. (2009). Optimal consumption and portfolio for an insider in a market with jumps. *Communications on Stochastic Analysis*, *3*(1), 101–117.

Davis, M. H. (1984). Piecewise-deterministic Markov processes: A general class of non-diffusion stochastic models. *Journal of the Royal Statistical Society. Series B. Statistical Methodology*, 353–388.

Davis, M. H. (1993). *Markov models and optimization. Vol. 49*. CRC Press.

DeCarlo, R., Branicky, M., Pettersson, S., & Lennartson, B. (2000). Perspectives and results on the stability and stabilizability of hybrid systems. *Proceedings of the IEEE*, *88*(7), 1069–1082.

De Jong, H., Gouzé, J.-L., Hernandez, C., Page, M., Sari, T., & Geiselmann, J. (2003). Hybrid modeling and simulation of genetic regulatory networks: a qualitative approach. In O. Maler, & A. Pnueli (Eds.), *Hybrid systems: computation and control* (pp. 267–282). Springer.

Deng, F., Luo, Q., & Mao, X. (2012). Stochastic stabilization of hybrid differential equations. *Automatica*, *48*(9), 2321–2328.

de Souza, C. E. (2006). Robust stability and stabilization of uncertain discrete-time Markovian jump linear systems. *IEEE Transactions on Automatic Control*, *51*(5), 836–841.

Dhople, S., Chen, Y., DeVille, L., & Dominguez-Garcia, A. (2013). Analysis of power system dynamics subject to stochastic power injections. *IEEE Transactions on Circuits and Systems*, *60*(12), 3341–3353.

Dimarogonas, D. V., & Kyriakopoulos, K. J. (2004). Lyapunov-like stability of switched stochastic systems. In *American control conference. Vol. 2* (pp. 1868–1872).

Donkers, M., Heemels, W., Van De Wouw, N., & Hetel, L. (2011). Stability analysis of networked control systems using a switched linear systems approach. *IEEE Transactions on Automatic Control*, *56*(9), 2101–2115.

Dragan, V., & Morozan, T. (2002). Stability and robust stabilization to linear stochastic systems described by differential equations with Markovian jumping and multiplicative white noise. *Stochastic Analysis and Applications*, *20*(1), 33–92.

Dufour, F., & Costa, O. L. (1999). Stability of piecewise-deterministic Markov processes. *SIAM Journal on Control and Optimization*, *37*(5), 1483–1502.

El Ghaoui, L., & Ait Rami, M. (1996). Robust state-feedback stabilization of jump linear systems via LMIs. *International Journal of Robust and Nonlinear Control*, *6*(910), 1015–1022.

Fang, Y., & Loparo, K. A. (2002). Stabilization of continuous-time jump linear systems. *IEEE Transactions on Automatic Control*, *47*(10), 1590–1603.

Feng, X., Loparo, K. A., Ji, Y., & Chizeck, H. J. (1992). Stochastic stability properties of jump linear systems. *IEEE Transactions on Automatic Control*, *37*(1), 38–53.

Feng, W., Tian, J., & Zhao, P. (2011). Stability analysis of switched stochastic systems. *Automatica*, *47*(1), 148–157.

Feng, W., & Zhang, J.-F. (2006). Stability analysis and stabilization control of multi-variable switched stochastic systems. *Automatica*, *42*(1), 169–176.

Filipovic, V. (2009). Exponential stability of stochastic switched systems. *Transactions of the Institute of Measurement and Control*, *31*(2), 205–212.

Fragoso, M. D., & Baczynski, J. (2002a). Lyapunov coupled equations for continuous-time infinite Markov jump linear systems. *Journal of Mathematical Analysis and Applications*, *274*(1), 319–335.

Fragoso, M. D., & Baczynski, J. (2002b). Stochastic versus mean square stability in continuous time linear infinite Markov jump parameter systems. *Stochastic Analysis and Applications*, *20*, 347–356.

Fragoso, M. D., & Costa, O. L. (2005). A unified approach for stochastic and mean square stability of continuous-time linear systems with Markovian jumping parameters and additive disturbances. *SIAM Journal on Control and Optimization*, *44*(4), 1165–1191.

Fristedt, B., & Gray, L. (1997). *A modern approach to probability theory*. Birkhäuser.

Fujiwara, T., & Kunita, H. (1985). Stochastic differential equations of jump type and Lévy processes in diffeomorphisms group. *Journal of Mathematics of Kyoto University*, *25*(1), 71–106.

Gerencsér, L., & Prokaj, V. (2010). Stability of a class of hybrid linear stochastic systems. *IEEE Transactions on Automatic Control*, *55*(5), 1233–1238.

Ghosh, M., Arapostathis, A., & Marcus, S. (1991). An optimal control problem arising in flexible manufacturing systems. In *Proceedings of the 30th IEEE conference on decision and control* (pp. 1844–1849). IEEE.

Ghosh, M. K., Arapostathis, A., & Marcus, S. I. (1993). Optimal control of switching diffusions with application to flexible manufacturing systems. *SIAM Journal on Control and Optimization*, *31*(5), 1183–1204.

Ghosh, R., & Tomlin, C. J. (2001). Lateral inhibition through delta-notch signaling: a piecewise affine hybrid model. In M. D. D. Benedetto, & A. Sangiovanni-Vincentelli (Eds.), *Hybrid systems: computation and control* (pp. 232–246). Springer.

Goebel, R., Hespanha, J. P., Teel, A. R., Cai, C., & Sanfelice, R. (2004). Hybrid systems: generalized solutions and robust stability. In *Proc. of the 6th IFAC symp. on nonlinear control systems. September* (pp. 1–12).

Goebel, R., Sanfelice, R. G., & Teel, A. R. (2009). Hybrid dynamical systems. *IEEE Control Systems Magazine*, *29*(2), 28–93.

Goebel, R., Sanfelice, R. G., & Teel, A. R. (2012). *Hybrid dynamical systems*. Princeton University Press.

Goebel, R., & Teel, A. R. (2006). Solutions to hybrid inclusions via set and graphical convergence with stability theory applications. *Automatica*, *42*, 573–587.

Hamilton, J. D. (1989). A new approach to the economic analysis of nonstationary time series and the business cycle. *Econometrica: Journal of the Econometric Society*, 357–384.

Hanson, F. (2007). *Applied stochastic processes and control for jump-diffusions: modeling, analysis, and computation*. Philadelphia: SIAM.

Hespanha, J. P. (2004). Stochastic hybrid systems: application to communication networks. In *Hybrid systems: computation and control* (pp. 387–401). Springer.

Hespanha, J. P. (2005). A model for stochastic hybrid systems with application to communication networks. *Nonlinear Analysis. Theory, Methods & Applications*, *62*(8), 1353–1383.

Hespanha, J. (2007). Stochastic hybrid modeling of on–off TCP flows. In C. Cassandras, & J. Lygeros (Eds.), *Stochastic hybrid systems* (pp. 191–220). Taylor & Francis.

Hespanha, J. P., Bohacek, S., Obraczka, K., & Lee, J. (2001). Hybrid modeling of TCP congestion control. In M. D. D. Benedetto, & A. Sangiovanni-Vincentelli (Eds.), *Hybrid systems: computation and control* (pp. 291–304). Springer.

Hespanha, J. P., Liberzon, D., & Teel, A. R. (2005). On input-to-state stability of impulsive systems. In *Proceedings of the 44th IEEE conference on decision and control* (pp. 3992–3997).

Hespanha, J. P., & Morse, A. S. (1999). Stability of switched systems with average dwell-time. In *Proceedings of the 38th IEEE conference on decision and control. December* (pp. 2655–2660).

Hespanha, J.P., & Teel, A.R. (2006). Stochastic impulsive systems driven by renewal processes. In *17th international symposium on mathematical theory of networks and systems*.

Hordijk, A., & van der Duyn Schouten, F. A. (1984). Discretization and weak convergence in Markov decision drift processes. *Mathematics of Operations Research*, *9*(1), 112–141.

Hu, J., Lygeros, J., & Sastry, S. (2000). Towards a theory of stochastic hybrid systems. In N. Lynch, & B. H. Krogh (Eds.), *Hybrid systems: computation and control* (pp. 160–173). Springer.

Hu, J., Prandini, M., & Sastry, S. (2005). Aircraft conflict prediction in the presence of a spatially correlated wind field. *IEEE Transactions on Intelligent Transportation Systems*, *6*(3), 326–340.

Hu, L., Shi, P., & Huang, B. (2006). Stochastic stability and robust control for sampled-data systems with Markovian jump parameters. *Journal of Mathematical Analysis and Applications*, *313*(2), 504–517.

Hu, J., Wu, W.-C., & Sastry, S. (2004). Modeling subtilin production in Bacillus subtilis using stochastic hybrid systems. In R. Alur, & G. J. Pappas (Eds.), *Hybrid systems: computation and control* (pp. 417–431). Springer.

Huang, L., & Mao, X. (2011). Stability of singular stochastic systems with Markovian switching. *IEEE Transactions on Automatic Control*, *56*(2), 424–429.

Ishijima, H., & Uchida, M. (2011). The regime switching portfolios. *Asia-Pacific Financial Markets*, *18*(2), 167–189.

Jacobsen, M. (2006). *Point process theory and applications: marked point and piecewise deterministic processes*. Boston: Birkhäuser.

Kærn, M., Elston, T. C., Blake, W. J., & Collins, J. J. (2005). Stochasticity in gene expression: from theories to phenotypes. *Nature Reviews Genetics*, *6*(6), 451–464.

Karan, M., Shi, P., & Kaya, C. Y. (2006). Transition probability bounds for the stochastic stability robustness of continuous-and discrete-time Markovian jump linear systems. *Automatica*, *42*(12), 2159–2168.

Kellett, C. M., & Teel, A. R. (2004). Smooth Lyapunov functions and robustness of stability for difference inclusions. *Systems & Control Letters*, *52*(5), 395–405.

Khalil, H. (2002). *Nonlinear systems* (3rd ed.). Prentice-Hall.

Khasminskii, R. (1960). Ergodic properties of recurrent diffusion processes and stabilization of the solution to the Cauchy problem for parabolic equations. *Theory of Probability and its Applications*, *5*(2), 179–196.

Khasminskii, R. (2012). *Stochastic stability of differential equations. Vol. 66*. Springer.

Khasminskii, R., Zhu, C., & Yin, G. (2007). Stability of regime-switching diffusions. *Stochastic Processes and their Applications*, *117*(8), 1037–1051.

Kisielewicz, M. (1997). Set-valued stochastic integrals and stochastic inclusions. *Stochastic Analysis and Applications*, *15*(5), 783–800.

Kisielewicz, M. (2013). *Stochastic differential inclusions and applications*. Springer.

Kozin, F. (1969). A survey of stability of stochastic systems. *Automatica*, *5*(1), 95–112.

Krasovskii, N. N. (1963). *Problems of the theory of stability of motion*. Stanford Univ. Press, Translation of Russian edition, Moscow 1959.

Kurzweil, J. (1963). On the inversion of Ljapunov's second theorem on stability of motion. *American Mathematical Society Translations Series 2*, *24*, 19–77. Originally appeared in Czechoslovak Mathematical Journal 81 (1956), pp. 217–259.

Kushner, H. J. (1968). The concept of invariant set for stochastic dynamical systems and applications to stochastic stability. In H. Karremann (Ed.), *Stochastic optimization and control* (pp. 47–57). New York: John Wiley & Sons, Inc.

Kushner, H. J. (2014). A partial history of the early development of continuous-time nonlinear stochastic systems theory. *Automatica*, *50*(2), 303–334.

LaSalle, J. P. (1960). Some extensions of Liapunov's second method. *IRE Transactions on Circuit Theory*, *7*(4), 520–527.

LaSalle, J. P. (1967). An invariance principle in the theory of stability. In J. K. Hale, & J. P. L. Salle (Eds.), *Differential equations and dynamical systems* (pp. 277–286). New York: Academic Press.

Liberzon, D. (2003). *Switching in systems and control*. Birkhäuser.

Liu, H., & Mu, X. (2006). Exponential stability of general stochastic hybrid systems and it's application. In *9th international conference on control, automation, robotics and vision* (pp. 1–5).

Liu, H., & Mu, X. (2008). The asymptotic stability of general stochastic hybrid systems. In *27th Chinese control conference* (pp. 628–631).

Liu, H., & Mu, X. (2009). The LaSalle stability theorem of general stochastic hybrid systems. In *Proceedings of the 48th IEEE conference on decision and control held jointly with the 28th Chinese control conference* (pp. 3969–3973).

Loparo, K. A., & Fang, Y. (2004). Stability of continuous time jump linear systems. *Dynamics of Continuous Discrete and Impulsive Systems—Series A—Mathematical Analysis*, *11*(2–3), 369–395.

Luo, J. (2006). Stability of invariant sets of Itô stochastic differential equations with Markovian switching. *International Journal of Stochastic Analysis*, 2006.

Lygeros, J., Johansson, K., Simić, S., Zhang, J., & Sastry, S. S. (2003). Dynamical properties of hybrid automata. *IEEE Transactions on Automatic Control*, *48*(1), 2–17.

Lygeros, J., Koutroumpas, K., Dimopoulos, S., Legouras, I., Kouretas, P., Heichinger, C., et al. (2008). Stochastic hybrid modeling of DNA replication across a complete genome. *Proceedings of the National Academy of Sciences*, *105*(34), 12295–12300.

Ma, S., & Boukas, E.-K. (2009). A singular system approach to robust sliding mode control for uncertain Markov jump systems. *Automatica*, *45*(11), 2707–2713.

Malhamé, R. (1990). A jump-driven Markovian electric load model. *Advances in Applied Probability*, 564–586.

Malhamé, R., & Chong, C. (1983). Stochastic hybrid state systems for electric load modeling. In *Proceedings of the 22nd IEEE conference on decision and control* (pp. 1143–1149).

Malhamé, R., & Chong, C.-Y. (1985). Electric load model synthesis by diffusion approximation of a high-order hybrid-state stochastic system. *IEEE Transactions on Automatic Control*, *30*(9), 854–860.

Mao, X. (1999). Stability of stochastic differential equations with Markovian switching. *Stochastic Processes and their Applications*, *79*(1), 45–67.

Mao, X. (2002). Exponential stability of stochastic delay interval systems with Markovian switching. *IEEE Transactions on Automatic Control*, *47*(10), 1604–1612.

Mao, X., Matasov, A., & Piunovskiy, A. B. (2000). Stochastic differential delay equations with Markovian switching. *Bernoulli*, *6*(1), 73–90.

Mao, X., & Shaikhet, L. (2000). Delay-dependent stability criteria for stochastic differential delay equations with Markovian switching. *Stability and Control: Theory and Applications*, *3*(2), 88–102.

Mao, X., Yin, G. G., & Yuan, C. (2007). Stabilization and destabilization of hybrid systems of stochastic differential equations. *Automatica*, *43*(2), 264–273.

Mao, X., & Yuan, C. (2006). *Stochastic differential equations with Markovian switching*. Imperial College Press.

Mariton, M. (1988). Almost sure and moments stability of jump linear systems. *Systems & Control Letters*, *11*(5), 393–397.

Mariton, M. (1990). *Jump linear systems in automatic control*. New York, NY: Marcel Dekker.

Mesquita, A. R., & Hespanha, J. P. (2010). Construction of Lyapunov functions for piecewise-deterministic Markov processes. In *Proc. of the 49th conf. on decision and contr. December* (pp. 2408–2413).

Meyn, S. P., & Tweedie, R. L. (1993). *Markov chains and stochastic stability*. Springer-Verlag.

Michel, A., Hou, L., & Liu, D. (2008). *Stability of dynamical systems: continuous, discontinuous, and discrete systems*. Birkhäuser.

Motyl, J. (1995). On the solution of stochastic differential inclusion. *Journal of Mathematical Analysis and Applications*, *192*(1), 117–132.

Nunno, G. D., Meyer-Brandis, T., Øksendal, B., & Proske, F. (2006). Optimal portfolio for an insider in a market driven by Lévy processes. *Quantitative Finance*, *6*(1), 83–94.

Pang, S., Deng, F., & Mao, X. (2008). Almost sure and moment exponential stability of Euler–Maruyama discretizations for hybrid stochastic differential equations. *Journal of Computational and Applied Mathematics*, *213*(1), 127–141.

Peng, S., & Zhang, Y. (2010). Some new criteria on pth moment stability of stochastic functional differential equations with Markovian switching. *IEEE Transactions on Automatic Control*, *55*(12), 2886–2890.

Pola, G., Bujorianu, M., Lygeros, J., & Benedetto, M. (2003). Stochastic hybrid models: an overview with applications to air traffic management. In *Proc. IFAC conf. anal. design hybrid syst.* (pp. 45–50).

Prandini, M., & Hu, J. (2008). Application of reachability analysis for stochastic hybrid systems to aircraft conflict prediction. In *Proceedings of the 47th IEEE conference on decision and control* (pp. 4036–4041).

Prandini, M., & Hu, J. (2009). Application of reachability analysis for stochastic hybrid systems to aircraft conflict prediction. *IEEE Transactions on Automatic Control*, *54*(4), 913–917.

Prandini, M., Hu, J., Lygeros, J., & Sastry, S. (2000). A probabilistic approach to aircraft conflict detection. *IEEE Transactions on Intelligent Transportation Systems*, *1*(4), 199–220.

Prato, G. D., & Frankowska, H. (1994). A stochastic Filippov theorem. *Stochastic Analysis and Applications*, *12*(4), 409–426.

Rao, C. V., Wolf, D. M., & Arkin, A. P. (2002). Control, exploitation and tolerance of intracellular noise. *Nature*, *420*(6912), 231–237.

Rockafellar, R. T., & Wets, R. J.-B. (1998). *Variational analysis*. Springer.

Rosenbloom, A. (1955). Analysis of linear systems with randomly time-varying parameters. In *Proc. symp. inf. nets. Vol. 3* (p. 145).

Samuels, J. (1959). On the mean square stability of random linear systems. *IRE Transactions on Information Theory*, *5*(5), 248–259.

Sanfelice, R. G., Goebel, R., & Teel, A. R. (2007). Invariance principles for hybrid systems with connections to detectability and asymptotic stability. *IEEE Transactions on Automatic Control*, *52*(12), 2282–2297.

Sanfelice, R. G., Goebel, R., & Teel, A. R. (2008). Generalized solutions to hybrid dynamical systems. *ESAIM: Control, Optimisation and Calculus of Variations*, *14*(4), 699–724.

Sanfelice, R. G., & Teel, A. R. (2009). Asymptotic stability in hybrid systems via nested Matrosov functions. *IEEE Transactions on Automatic Control*, *54*(7), 1569–1574.

Sanfelice, R. G., & Teel, A. R. (2011). On singular perturbations due to fast actuators in hybrid control systems. *Automatica*, *47*(4), 692–701.

Schaller, H., & Norden, S. V. (1997). Regime switching in stock market returns. *Applied Financial Economics*, *7*(2), 177–191.

Singh, A., & Hespanha, J. P. (2010). Stochastic hybrid systems for studying biochemical processes. *Philosophical Transactions of the Royal Society of London A (Mathematical and Physical Sciences)*, *368*(1930), 4995–5011.

Sontag, E. (1998). Comments on integral variants of ISS. *Systems & Control Letters*, *34*, 93–100.

Subbaraman, A., & Teel, A. R. (2013). A converse Lyapunov theorem for strong global recurrence. *Automatica*, *49*(10), 2963–2974.

Sworder, D. (1969). Feedback control of a class of linear systems with jump parameters. *IEEE Transactions on Automatic Control*, *14*(1), 9–14.

Tabbara, M., & Nesic, D. (2008). Input–output stability of networked control systems with stochastic protocols and channels. *IEEE Transactions on Automatic Control*, *53*(5), 1160–1175.

Teel, A. R. (2013). Lyapunov conditions certifying stability and recurrence for a class of stochastic hybrid systems. *Annual Reviews in Control*, *37*, 1–24.

Teel, A.R. (2014a). Stochastic hybrid inclusions with diffusive flows. In *Proceedings of the 53rd IEEE conference on decision and control* (to appear).

Teel, A. R. (2014b). On a recurrence principle for a class of stochastic hybrid systems. In *Proceedings of the American control conference* (pp. 4518–4523).

Teel, A. R. (2014c). On sequential compactness of solutions for a class of stochastic hybrid systems. In *Proceedings of the American control conference* (pp. 4512–4517).

Teel, A. R., Hespanha, J. P., & Subbaraman, A. (2014). A converse Lyapunov theorem and robustness for asymptotic stability in probability. *IEEE Transactions on Automatic Control*.

Teel, A. R., & Praly, L. (2000). A smooth Lyapunov function from a class-$\mathcal{KL}$ estimate involving two positive semidefinite functions. *ESAIM: Control, Optimisation and Calculus of Variations*, *5*, 313–367.

Teel, A. R., & Zaccarian, L. (2006). On uniformity in definitions of global asymptotic stability for time-varying nonlinear systems. *Automatica*, *42*(12), 2219–2222.

Tweedie, R. L. (1975). Sufficient conditions for ergodicity and recurrence of Markov chains on a general state space. *Stochastic Processes and their Applications*, *3*(4), 385–403.

Ugrinovskii, V., & Pota, H. R. (2005). Decentralized control of power systems via robust control of uncertain Markov jump parameter systems. *International Journal of Control*, *78*(9), 662–677.

Wang, K., & Crow, M. L. (2011). Numerical simulation of stochastic differential algebraic equations for power system transient stability with random loads. In *IEEE power and energy society general meeting* (pp. 1–8).

Wang, Z., Qiao, H., & Burnham, K. (2002). On stabilization of bilinear uncertain time-delay stochastic systems with Markovian jumping parameters. *IEEE Transactions on Automatic Control*, *47*(4), 640–646.

Wang, W., Teel, A. R., & Nesic, D. (2012). Analysis for a class of singularly perturbed hybrid systems via averaging. *Automatica*, *48*(6), 1057–1068.

Watkins, O., & Lygeros, J. (2003). Stochastic reachability for discrete time systems: An application to aircraft collision avoidance. In *Proceedings of the 42nd IEEE conference on decision and control* (pp. 5314–5319).

Wilkinson, D. J. (2012). *Stochastic modelling for systems biology. Vol. 44*. CRC Press.

Wonham, W. (1966). Liapunov criteria for weak stochastic stability. *Journal of Differential Equations*, *2*, 195–207.

Wu, Z., Cui, M., Shi, P., & Karimi, H. (2013). Stability of stochastic nonlinear systems with state-dependent switching. *IEEE Transactions on Automatic Control*, *58*(8), 1904–1918.

Wu, S., Han, D., & Meng, X. (2004). *p*-moment stability of stochastic differential equations with jumps. *Applied Mathematics and Computation*, *152*(2), 505–519.

Wu, L., Ho, D., & Li, C. (2010). Stabilisation and performance synthesis for switched stochastic systems. *IET Control Theory & Applications*, *4*(10), 1877–1888.

Wu, H., & Sun, J. (2006). *p*-moment stability of stochastic differential equations with impulsive jump and Markovian switching. *Automatica*, *42*(10), 1753–1759.

Xia, Y., Boukas, E.-K., Shi, P., & Zhang, J. (2009). Stability and stabilization of continuous-time singular hybrid systems. *Automatica*, *45*(6), 1504–1509.

Xiang, Z., Wang, R., & Chen, Q. (2011). Robust reliable stabilization of stochastic switched nonlinear systems under asynchronous switching. *Applied Mathematics and Computation*, *217*(19), 7725–7736.

Xiong, J., Lam, J., Gao, H., & Ho, D. W. (2005). On robust stabilization of Markovian jump systems with uncertain switching probabilities. *Automatica*, *41*(5), 897–903.

Yang, Y., Li, J., & Chen, G. (2009). Finite-time stability and stabilization of nonlinear stochastic hybrid systems. *Journal of Mathematical Analysis and Applications*, *356*(1), 338–345.

Yang, Z., Xu, D., & Xiang, L. (2006). Exponential *p*-stability of impulsive stochastic differential equations with delays. *Physics Letters A*, *359*(2), 129–137.

Yin, G. G., & Zhu, C. (2010). *Hybrid switching diffusions: properties and applications. Vol. 63*. Springer.

Yuan, C., & Lygeros, J. (2005a). On the exponential stability of switching diffusion processes. *IEEE Transactions on Automatic Control*, *50*(9), 1422–1426.

Yuan, C., & Lygeros, J. (2005b). Stabilization of a class of stochastic differential equations with Markovian switching. *Systems & Control Letters*, *54*(9), 819–833.

Yuan, C., & Mao, X. (2003). Asymptotic stability in distribution of stochastic differential equations with Markovian switching. *Stochastic Processes and their Applications*, *103*(2), 277–291.

Yuan, C., & Mao, X. (2004). Robust stability and controllability of stochastic differential delay equations with Markovian switching. *Automatica*, *40*(3), 343–354.

Yue, D., Fang, J., & Won, S. (2003). Delay-dependent robust stability of stochastic uncertain systems with time delay and Markovian jump parameters. *Circuits, Systems and Signal Processing*, *22*(4), 351–365.

Yue, D., & Han, Q.-L. (2005). Delay-dependent exponential stability of stochastic systems with time-varying delay, nonlinearity, and Markovian switching. *IEEE Transactions on Automatic Control*, *50*(2), 217–222.

Yue, D., & Won, S. (2001). Delay-dependent robust stability of stochastic systems with time delay and nonlinear uncertainties. *Electronics Letters*, *37*(15), 992–993.

Yushkevich, A. (1983). Continuous time Markov decision processes with interventions. *Stochastics: An International Journal of Probability and Stochastic Processes*, *9*(4), 235–274.

Yushkevich, A. (1986). Markov decision processes with both continuous and impulsive control. In *Stochastic optimization* (pp. 234–246). Springer.

Zhang, L., & Boukas, E.-K. (2009). Stability and stabilization of Markovian jump linear systems with partly unknown transition probabilities. *Automatica*, *45*(2), 463–468.

Zhao, P., Feng, W., & Kang, Y. (2012). Stochastic input-to-state stability of switched stochastic nonlinear systems. *Automatica*, *48*(10), 2569–2576.

Zhu, Q. (2014). Asymptotic stability in the *p*th moment for stochastic differential equations with Lévy noise. *Journal of Mathematical Analysis and Applications*, *416*(1), 126–142.

Zhu, C., Yin, G., & Song, Q. (2009). Stability of random-switching systems of differential equations. *The Quarterly of Applied Mathematics*, *67*(2), 201–220.

Andrew R. Teel received his A.B. degree in Engineering Sciences from Dartmouth College in Hanover, New Hampshire, in 1987, and his M.S. and Ph.D. degrees in Electrical Engineering from the University of California, Berkeley, in 1989 and 1992, respectively. After receiving his Ph.D., he was a postdoctoral fellow at the Ecole des Mines de Paris in Fontainebleau, France. In 1992 he joined the faculty of the Electrical Engineering Department at the University of Minnesota, where he was an assistant professor until 1997. Subsequently, he joined the faculty of the Electrical and Computer Engineering Department at the University of California, Santa Barbara, where he is currently a professor. His research interests are in nonlinear and hybrid dynamical systems, with a focus on stability analysis and control design. He has received NSF Research Initiation and CAREER Awards, the 1998 IEEE Leon K. Kirchmayer Prize Paper Award, the 1998 George S. Axelby Outstanding Paper Award, and was the recipient of the first SIAM Control and Systems Theory Prize in 1998. He was the recipient of the 1999 Donald P. Eckman Award and the 2001 O. Hugo Schuck Best Paper Award, both given by the American Automatic Control Council, and also received the 2010 IEEE Control Systems Magazine Outstanding Paper Award. He is an area editor for Automatica, and a Fellow of the IEEE and of IFAC.

Anantharaman Subbaraman received the B.Tech. degree in Control Engineering from the National Institute of Technology, Trichy, India, in 2010, and the M.S. degree in Electrical Engineering from the University of California, Santa Barbara (UCSB) in 2011, where he is currently pursuing the Ph.D. degree in the area of control systems in the Department of Electrical and Computer Engineering. His current research interests include stability and control of stochastic hybrid systems.

Antonino Sferlazza was born in Palermo, Italy, on November 1987. He received the Master's degree in automation engineering from the University of Palermo, Italy, in 2011. Currently he is Ph.D. student in system and control engineering in the Department of Electrical and Information Engineering and Mathematical Model at the University of Palermo, Italy.

His research interests focus on the development of feedback control algorithms for nonlinear systems and estimation of stochastic dynamical systems. He is also interested in applications of control of electrical drives, power converters and mechanical systems.